Material Handling Machine

LH 110 Port

Litronic®

Generation
6

Operating Weight
220,500 – 308,600 lb*

Engine
402 HP (I) / 300 kW
Stage Tier 4f
Electric

System Performance
478 kW

* Without attachment

LIEBHERR

Material Handling Machines Overview

Equipment

- High lift capacities and long reaches thanks to weight-optimised design for more handling capacity
- Energy recovery cylinder filled with nitrogen for maximum efficiency through less fuel consumption at more handling capacity
- Pipe fracture safety valves on hoist and stick cylinders and retract stick shut-off for maximum safety during every application
- Electro-hydraulic end position control extends the service life of the components
- Quick coupling systems and attachments made by Liebherr for maximum machine capacity utilisation and greater handling performance

Operator's Cab

- Hydraulic cab elevations for always the best view downwards as well as forwards
- Less strain on the operator, workers and reduced environmental pollution due to lower noise emissions
- Optimum visibility thanks to large glass surfaces and standard rear and side area monitoring with camera
- Joystick steering without steering column as standard for convenient operation, greater legroom and clear view of the working area at mobile undercarriage
- Proportional control as standard with 4-way minijoystick for greater precision, highprecision control and functions

Uppercarriage

- 2-circuit Liebherr-Synchron-Comfort-Hydraulicsystem (LSC) with LUDV technology for faster working speed at minimum fuel consumption
- 300 kW engine output and high pump flow for fast work cycles, convincing dynamics and maximum handling performance
- Electrical pilot control enables individual settings for the operator and new options such as load torque limitation
- Reduction in operating costs thanks to built-in maintenance advantages and optimum service accessibility
- Optimised hydraulics with closed slewing mechanism circuit for greater fuel efficiency and faster work cycles

Undercarriage

- Central lubrication system manually centralised or automatically for more productive working time at mobile undercarriage
- Large footprint for high stability and maximum lift capacities
- Variety of undercarriage variants for different applications available
- Low service costs thanks to travel drive without gearbox and cardan shafts at mobile undercarriage

The Perfect Solution for Every Application

Attachments

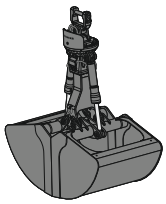

Shells for loose material

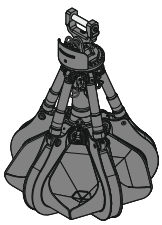

Multi-tine grab

Wood grab

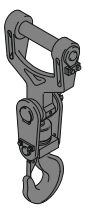

Load hook

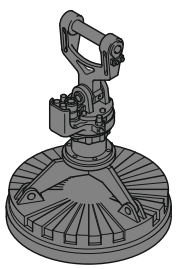

Magnet devices

Sticks

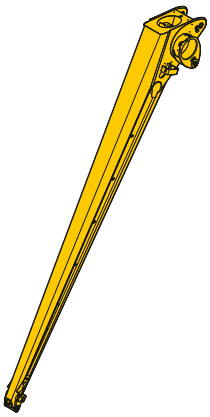

Straight stick

Booms

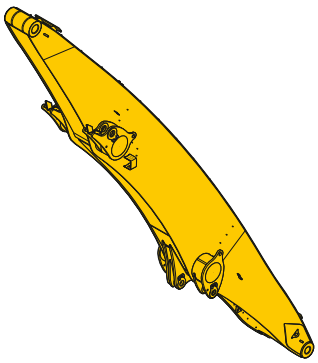

Straight boom

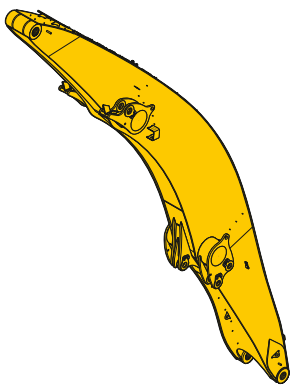

Angled boom

Cab Elevations

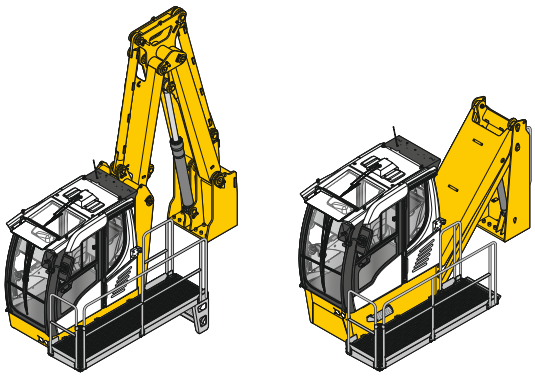

Hydraulic cab elevation

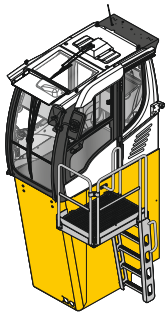

Rigid cab elevation

Uppercarriage

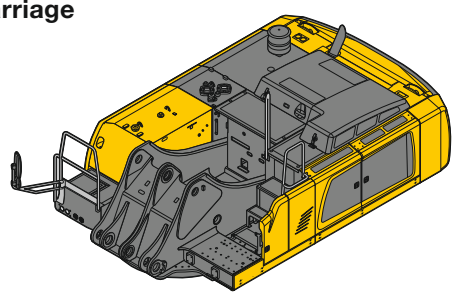

Diesel engine

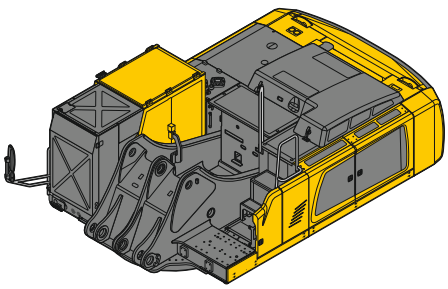

Electric motor

Undercarriage

Turret Elevations

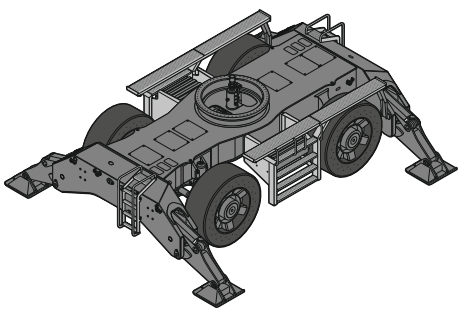

Mobile

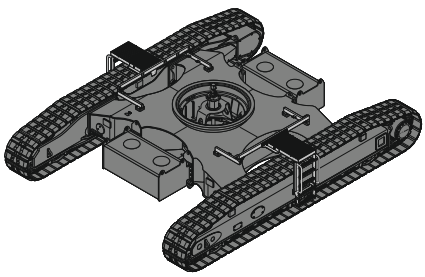

Crawler

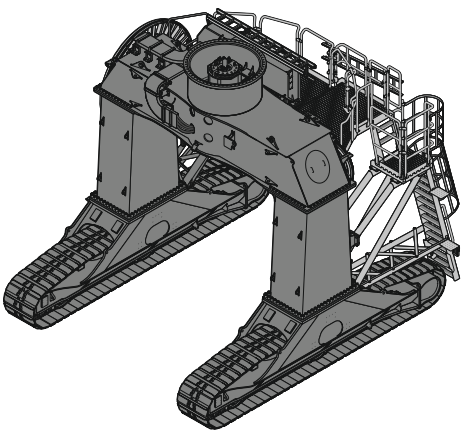

Gantry (Crawler)

Technical Data

Diesel Engine

Rating per SAE J1349/ISO 9249	402 HP (I) (300 kW) at 1,800 rpm
Model	Liebherr D946
Type	6 cylinder in-line
Bore/Stroke	5.1/5.9 in
Displacement	729,23 in³
Engine operation	4-stroke diesel Common-Rail turbo-charged and after-cooled reduced emissions
Air cleaner	dry-type air cleaner with pre-cleaner, primary and safety elements
Engine idling	sensor controlled
Electrical system	
Voltage	24 V
Batteries	2 x 180 Ah/12 V
Alternator	three-phase current 28 V/140 A
Stage Tier 4f	
Harmful emissions values	in accordance with EPA/CARB-40CFR stage Tier 4f
Emission control	Liebherr-SCR technology
Fuel tank	357 gal
Urea tank	48 gal

Electric Motor

Rating	300 kW at 1,700 rpm
Model	Liebherr KGF1182/6
Type	three-phase squirrel cage motor
Secondary electric motor	
Electric motor auxiliary equipment (air-conditioning compressor, alternator 24 V)	15 kW
Electrical system energy supply	Liebherr drive components and control cabinets for uppercarriage and undercarriage Liebherr frequency converter fed drive system heavy-duty version
Manufacturer	Liebherr
Supply voltage	
Low voltage	380 – 690 V
High voltage	2.14 – 20 kV
Frequency	50/60 Hz
Engine idling	sensor controlled
Electrical system	battery-assisted control system, lighting, diagnostics system
Voltage	24 V
Batteries	2 x 180 Ah/12 V
Alternator	three-phase current 28 V/140 A

Cooling System

Diesel engine	water-cooled cooling system, consisting of a cooling unit for water and charge air and a 2nd cooler for hydraulic oil, each with an infinitely variable, thermostatically controlled fan drive system
Electric motor	air-cooled cooling system for hydraulic oil with an infinitely variable, thermostatically controlled fan drive system frequency converter water-cooled

Hydraulic Controls

Power distribution	via control valves with integrated safety valves, simultaneous actuation of chassis and equipment. Swing drive in separate closed circuit
Servo circuit	
Equipment and swing	with electro-hydraulic pilot control and proportional joystick levers
Chassis	with electric proportionally functioning foot pedals or adjusted with plugable levers
Additional functions	via switch or electro-proportional foot pedals
Proportional control	proportionally acting transmitters on the joysticks for additional hydraulic functions

Hydraulic System

Hydraulic pump	
for equipment and travel drive	2 Liebherr axial piston variable displacement pumps (double construction)
Max. flow	2 x 122 gpm
Max. pressure	5,076 psi
for swing drive	reversible axial piston variable displacement pump, closed-loop circuit
Max. flow	94 gpm
Max. pressure	5,004 psi
Hydraulic pump regulation and control	2 circuit Liebherr-Synchron-Comfort-system (LSC) with electronic engine speed sensing regulation, pressure and flow compensation, automatic oil flow optimizer
Hydraulic tank	120 gal
Hydraulic system	310 gal
Hydraulic oil filter	2 main return filters with integrated partial micro filtration (5 µm)
MODE selection	adjustment of engine and hydraulic performance via a mode pre-selector to match application, e.g. for especially economical and environmentally friendly operation or for maximum material handling and heavy-duty jobs
S (Sensitive)	mode for precision work and lifting through very sensitive movements
E (Eco)	mode for especially economical and environmentally friendly operation
P (Power)	mode for high performance with low fuel consumption
P+ (Power-Plus)	mode for highest performance and for very heavy duty applications, suitable for continuous operation
Engine speed and performance setting	stepless alignment of engine output and hydraulic power via engine speed
Option	Tool Control: 20 pre-adjustable pump flows and pressures for add-on attachments

Swing Drive

Drive	Liebherr axial piston motor in a closed system, Liebherr planetary reduction gear
Swing ring	Liebherr, sealed race ball bearing swing ring, internal teeth
Swing speed	0 – 6.5 rpm stepless
Swing torque	147,512 lbf ft
Holding brake	wet multi-disc (spring applied, pressure released)
Option	slewing gear brake Comfort

Operator's Cab

Cab	safety cab structure with fixed built-in front and roof window made from impact-resistant laminated safety glass, work headlights integrated in the ceiling, a door with a sliding window (can be opened on both sides), large stowing and depositing possibilities, shock-absorbing suspension, sound damping insulating, tinted laminated safety glass, separate shades for the sunroof window and windscreen
High Rise/Gantry	deviating from standard: safety cab structure with fixed built-in front and roof window made from impact-resistant laminated safety glass
Operator's seat Comfort	air cushioned operator's seat with 3D-adjustable armrests, headrest, lap belt, seat heater, adjustable seat cushion inclination and length, lockable horizontal suspension, automatic weight adjustment, adjustable suspension stiffness, pneumatic lumbar vertebrae support and passive seat climatisation with active coal
Operator's seat Premium (Option)	in addition to operator's seat comfort: active electronic weight adjustment (automatic re-adjustment), pneumatic low frequency suspension and active seat climatisation with active coal and ventilator
Control system	joysticks with control consoles and swivel seat, folding left control console
Operation and displays	large high-resolution operating unit, self-explanatory, color display with touchscreen, video-compatible, numerous settings, control and monitoring options, e.g. air conditioning control, fuel consumption respectively energy consumption, machine and attachment parameters
Air-conditioning	
Diesel engine	automatic air-conditioning, recirculated air function, fast de-icing and demisting at the press of a button, air vents can be operated via a menu; recirculated air and fresh air filters can be easily replaced and are accessible from the outside; heating-cooling unit, designed for extreme outside temperatures, sensors for solar radiation, inside and outside temperatures
Electric motor	in addition to diesel engine: stationary air conditioning function with external climate condenser – controlled by a weekly timer

Undercarriage

Mobile	
Versions	Standard, High Rise
Drive	one driven axle with transmission with Liebherr axial piston motor and functional brake valve on both sides
Travel speed	
Joystick steering	0 – 3.1 mph stepless (creeper speed) 0 – 5.0 mph stepless
Driving operation	automotive driving using accelerator pedal, cruise control function: storage of variable accelerator pedal positions
Axles	198,400 lb drive axles; manual or automatic hydraulically controlled front axle oscillation lock
Service brake	two circuit travel brake system with accumulator; wet and backlash-free disc brake
Holding brake	wet multi-disc (spring applied, pressure released)
Stabilization	4 point outriggers
Crawler	
Versions	SW, High Rise, Gantry
Drive	Liebherr compact planetary reduction gear with Liebherr axial piston motor per side of undercarriage
Travel speed	0 – 1.6 mph stepless (creeper speed) 0 – 2.5 mph stepless
Brake	functional brake valves on both sides
Holding brake	wet multi-disc (spring applied, pressure released)
Track pads	flat
Tracks	sealed and greased

Equipment

Type	weight-optimized design for bulk and general cargo handling at optimal handling capacity. Complex and stable mountings of equipment and cylinders
Hydraulic cylinders	Liebherr cylinders with special seal system as well as shock absorption
Energy recovering cylinder	Liebherr gas cylinder with special sealing and control system
Bearings	sealed, low maintenance

Complete Machine

Lubrication	Liebherr central lubrication system for upper-carriage and equipment, automatically
Mobile (Option)	Liebherr central lubrication system for undercarriage, automatically
Steps system	safe and durable access system with anti-slip steps; main components hot-galvanized
Noise emission	
ISO 6396	L_{pA} (inside cab) = 71 dB(A)
2000/14/EC	L_{WA} (surround noise) = 107 dB(A)

LH 110 M – Dimensions

Port

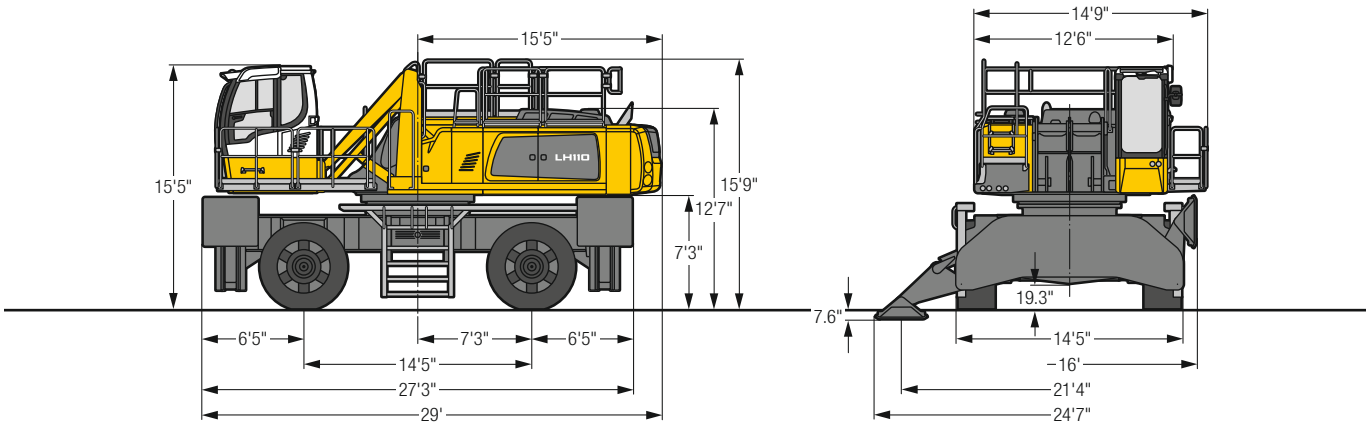

LH 110 M – Choice of Cab Elevation

Cab Elevation LFC (Rigid Elevation)

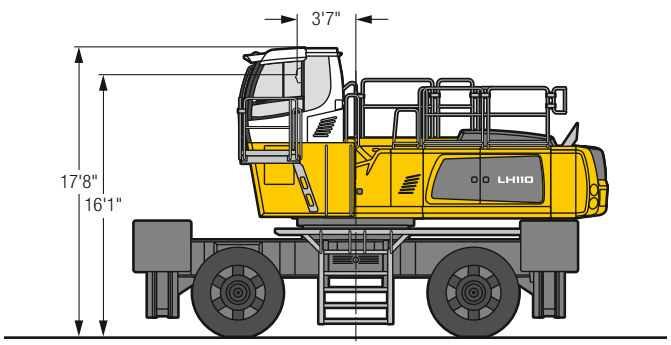

Increase type	LFC 120

A rigid cab elevation has a fixed eye level height. For a lower transport height, the shell of the cab can be removed and replaced by a transport device. The dimension 17'8" is in this machine design for all rigid cab elevations 14'9".

Cab Elevation LHC (Hydraulic Elevation)

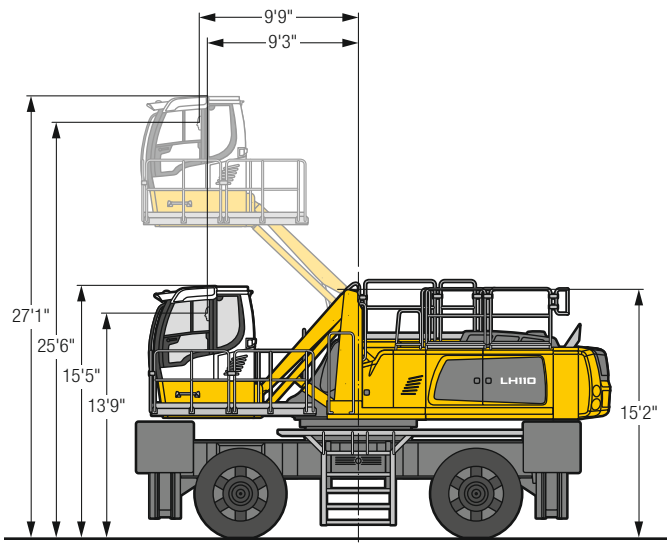

Increase type	LHC 360-50

The hydraulically adjustable cab allows the driver, that he can choose his field of view freely and at any time within the stroke.

Tires 26.5-66

LH 110 M HR – Dimensions

Port

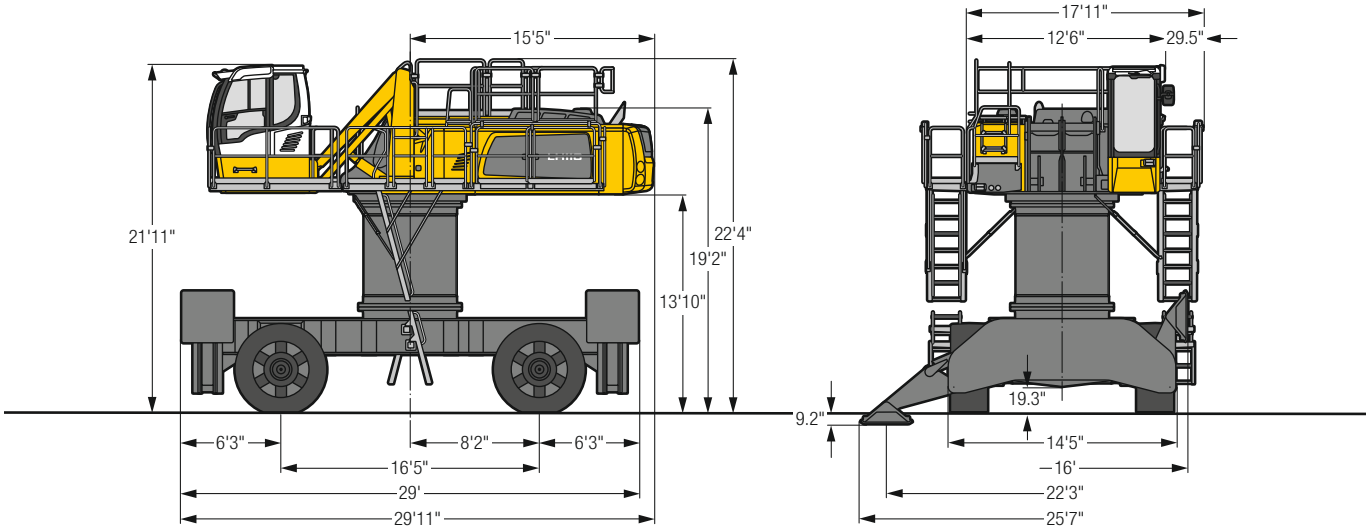

LH 110 M HR – Choice of Cab Elevation

Cab Elevation LHC
(Hydraulic Elevation)

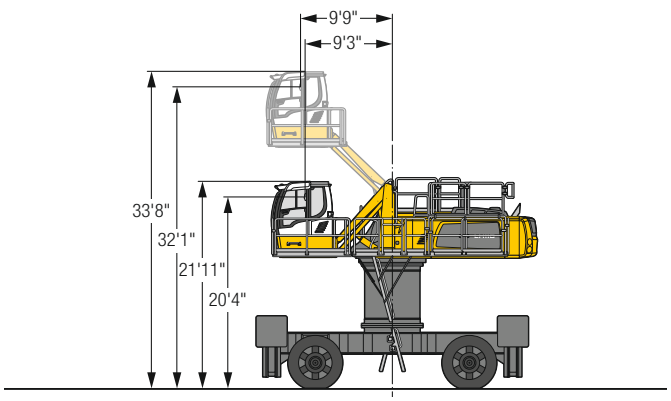

Increase type	LHC 360-50

The hydraulically adjustable cab allows the driver, that he can choose his field of view freely and at any time within the stroke.

Cab Elevation LHC-D
(Hydraulic Elevation)

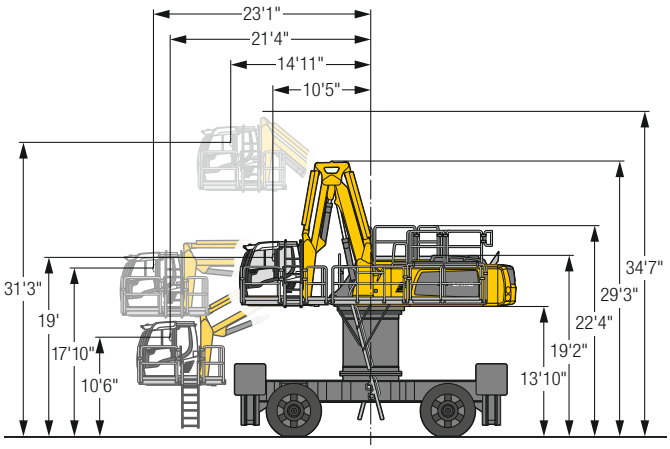

Increase type	LHC-D 730

The hydraulically adjustable cab allows the driver, that he can choose his field of view freely and at any time within the stroke.

Tires 28.00-69

LH 110 C – Dimensions
Port

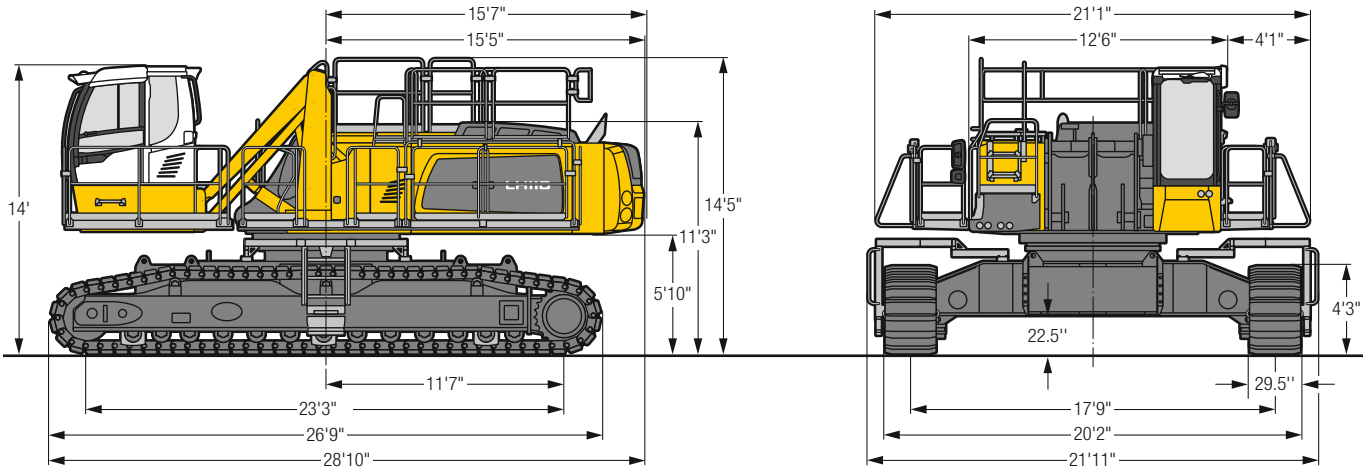

LH 110 C – Choice of Cab Elevation

Cab Elevation LFC (Rigid Elevation)

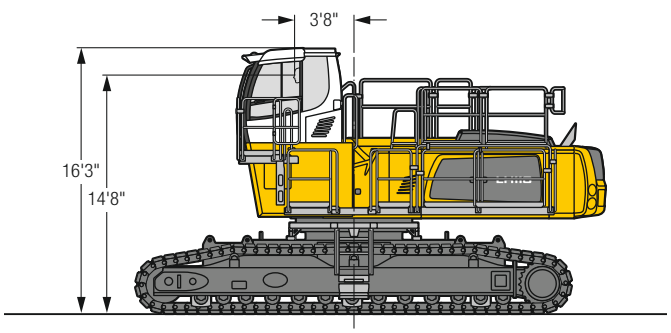

Increase type **LFC 120**

A rigid cab elevation has a fixed eye level height. For a lower transport height, the shell of the cab can be removed and replaced by a transport device. The dimension 16'3" is in this machine design for all rigid cab elevations 13'4".

Cab Elevation LHC (Hydraulic Elevation)

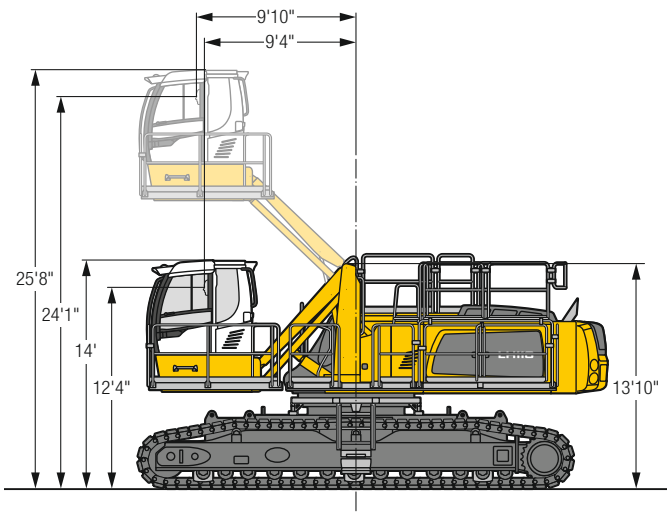

Increase type **LHC 360-50**

The hydraulically adjustable cab allows the driver, that he can choose his field of view freely and at any time within the stroke.

LH 110 C HR – Dimensions

Port

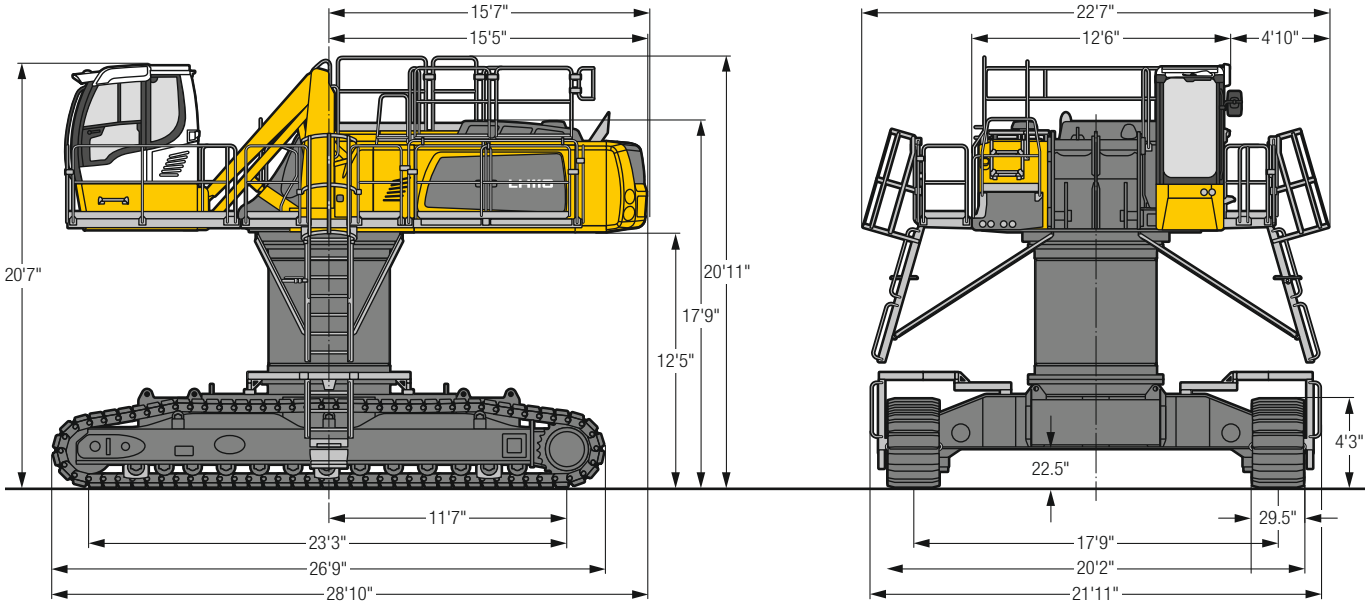

LH 110 C HR – Choice of Cab Elevation

Cab Elevation LHC
(Hydraulic Elevation)

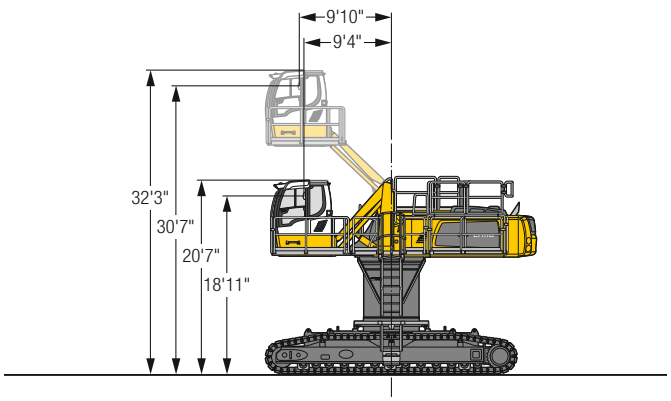

Increase type	LHC 360-50

The hydraulically adjustable cab allows the driver, that he can choose his field of view freely and at any time within the stroke.

Cab Elevation LHC-D
(Hydraulic Elevation)

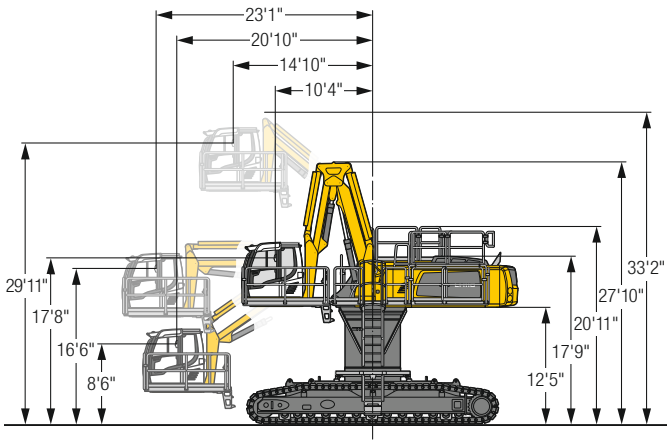

Increase type	LHC-D 730

The hydraulically adjustable cab allows the driver, that he can choose his field of view freely and at any time within the stroke.

LH 110 C Gantry – Dimensions

Port

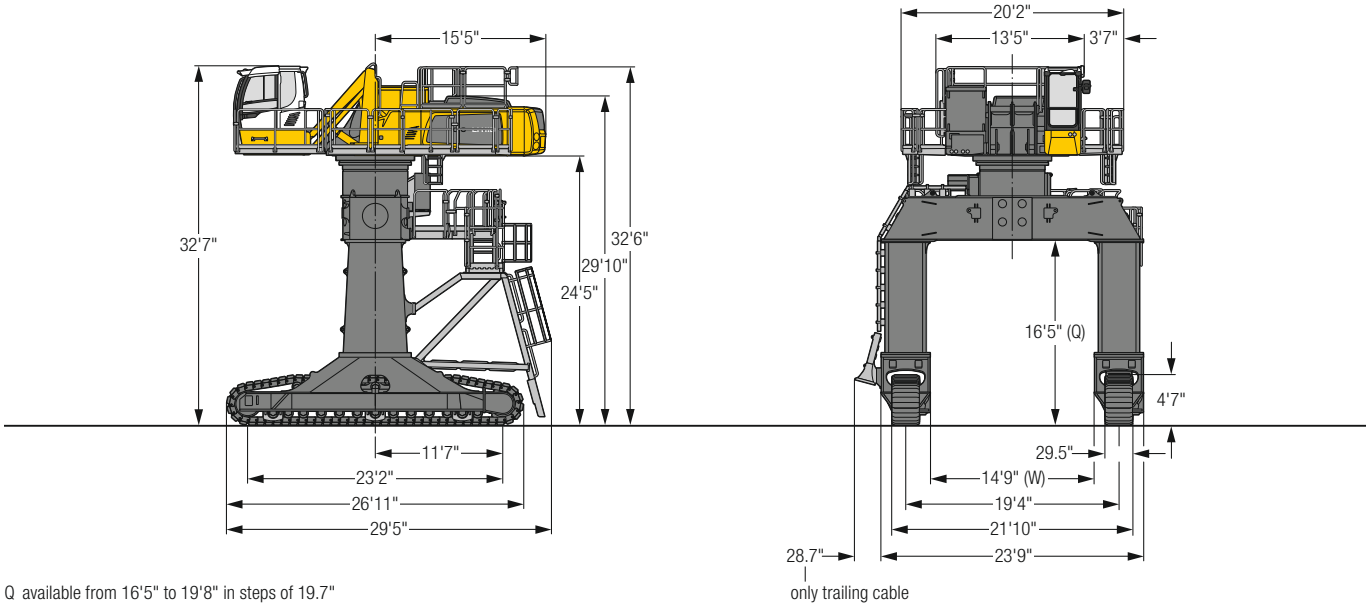

Q available from 16'5" to 19'8" in steps of 19.7"
W available from 14'9" to 29'6" in steps of 19.7"

LH 110 C Gantry – Choice of Cab Elevation

Cab Elevation LHC (Hydraulic Elevation)

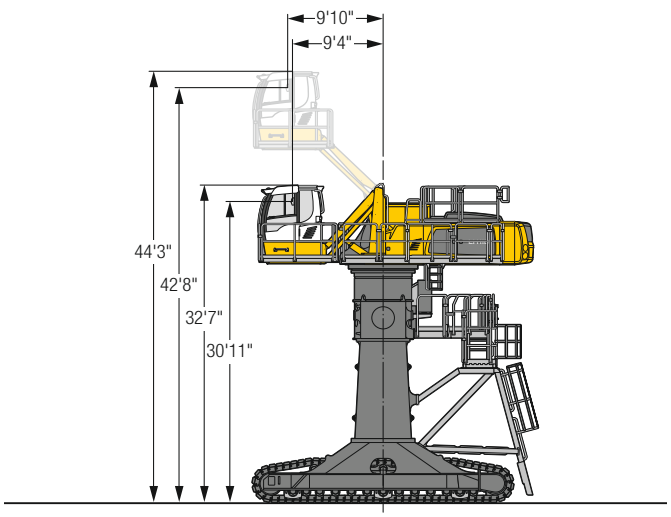

Increase type	LHC 360-50

The hydraulically adjustable cab allows the driver, that he can choose his field of view freely and at any time within the stroke.

Cab Elevation LHC-D (Hydraulic Elevation)

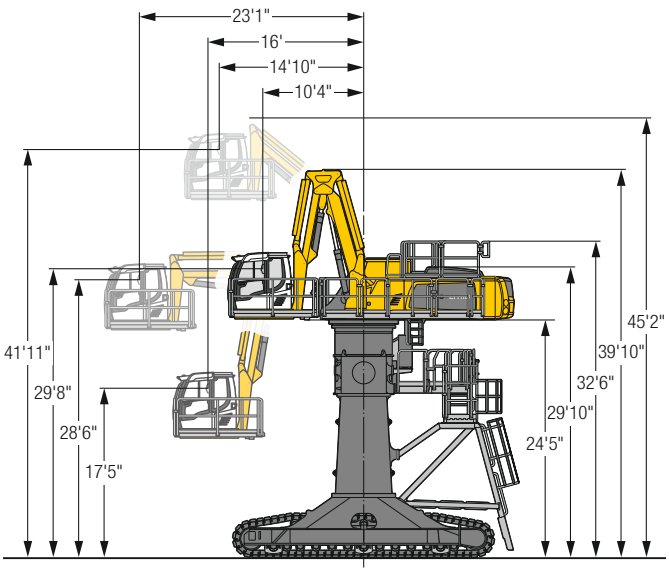

Increase type	LHC-D 730

The hydraulically adjustable cab allows the driver, that he can choose his field of view freely and at any time within the stroke.

Kinematic Variants

Kinematic Variant 2A

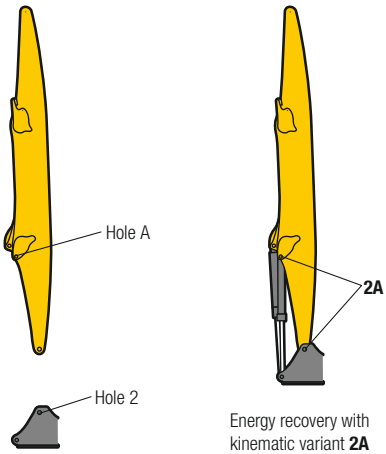

Energy recovery with kinematic variant **2A**

Kinematic Variant 2D / 2C

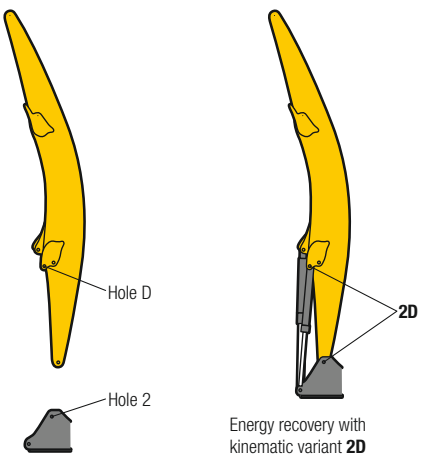

Energy recovery with kinematic variant **2D**

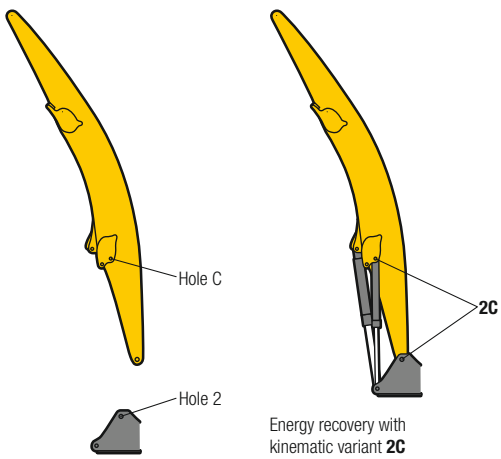

Energy recovery with kinematic variant **2C**

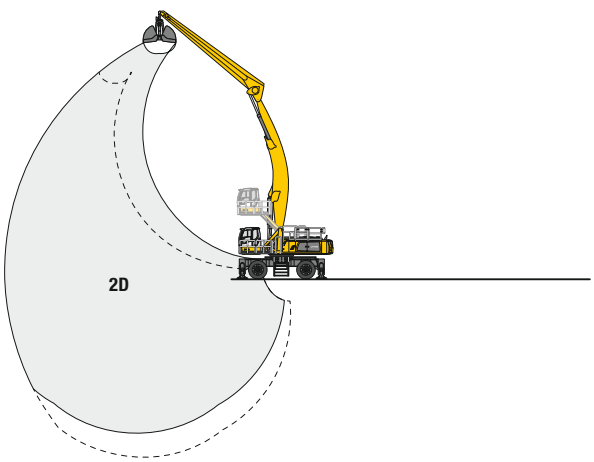

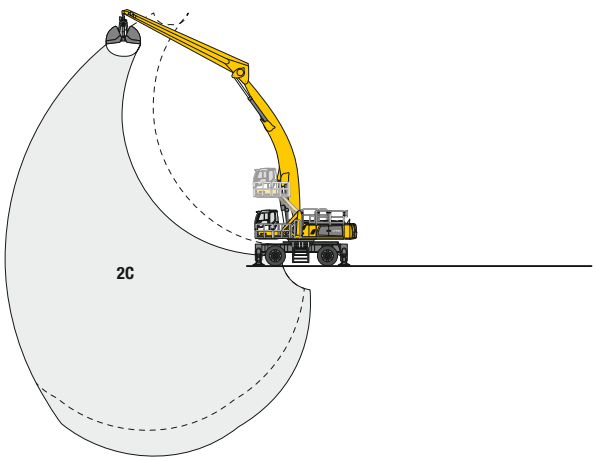

Altered range curve with additional reach depth, e.g. for unloading from ships

LH 110 M – Equipment GG17

Port – Kinematic 2A

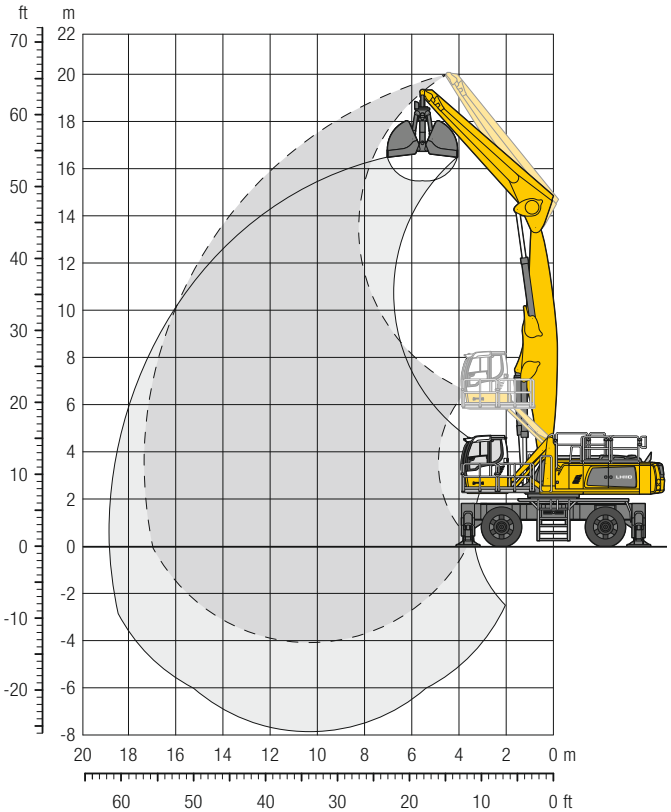

Operating Weight

The operating weight includes the basic machine with 4 point outriggers, hydr. cab elevation, 4 solid tyres, straight boom 32'10", straight stick 24'7" and grab for loose material GMZ 120/ 10.46 yd³.

Weight	222,400 lb

Dimensions

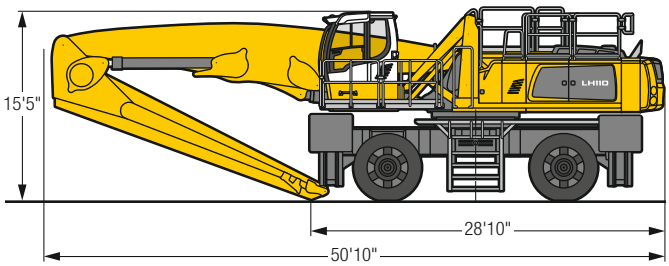

ft	Undercarriage	20 ft		25 ft		30 ft		35 ft		40 ft		45 ft		50 ft		55 ft		60 ft		65 ft		70 ft		75 ft		80 ft		85 ft		90 ft				ft in
75	4 pt. outriggers down																																	
70	4 pt. outriggers down																																	
65	4 pt. outriggers down																															60,1*	60,1*	**17' 1"**
60	4 pt. outriggers down			54,7*	54,7*																											44,2*	44,2*	**28' 8"**
55	4 pt. outriggers down			58,9*	58,9*	53,4*	53,4*	42,3*	42,3*																							38,2*	38,2*	**36' 1"**
50	4 pt. outriggers down					51,3*	51,3*	47,6*	47,6*	41,0*	41,0*																					34,9*	34,9*	**41' 6"**
45	4 pt. outriggers down					50,5*	50,5*	46,7*	46,7*	43,8*	43,8*	36,4*	36,4*																			32,9*	32,9*	**45' 8"**
40	4 pt. outriggers down					50,8*	50,8*	46,7*	46,7*	43,6*	43,6*	41,1*	41,1*																			31,6*	31,6*	**49' 1"**
35	4 pt. outriggers down					51,9*	51,9*	47,5*	47,5*	43,9*	43,9*	41,1*	41,1*	38,8*	38,8*																	30,8*	30,8*	**51' 8"**
30	4 pt. outriggers down			60,8*	60,8*	54,0*	54,0*	48,8*	48,8*	44,8*	44,8*	41,5*	41,5*	38,9*	38,9*																	30,4*	30,4*	**53' 8"**
25	4 pt. outriggers down	77,2*	77,2*	65,2*	65,2*	56,9*	56,9*	50,7*	50,7*	46,0*	46,0*	42,3*	42,3*	39,2*	39,2*	31,9*	31,9*															30,3*	30,3*	**55' 2"**
20	4 pt. outriggers down	86,2*	86,2*	70,6*	70,6*	60,3*	60,3*	53,0*	53,0*	47,5*	47,5*	43,2*	43,2*	39,6*	39,6*	36,1*	36,1*															30,5*	30,5*	**56' 2"**
15	4 pt. outriggers down	96,0*	96,0*	76,3*	76,3*	63,9*	63,9*	55,3*	55,3*	49,0*	49,0*	44,1*	44,1*	40,0*	40,0*	36,0*	36,0*															30,9*	30,9*	**56'10"**
10	4 pt. outriggers down	97,8*	97,8*	81,3*	81,3*	67,1*	67,1*	57,4*	57,4*	50,3*	50,3*	44,8*	44,8*	40,1*	40,1*	35,4*	35,4*															31,7*	31,7*	**56'11"**
5	4 pt. outriggers down	51,3*	51,3*	84,5*	84,5*	69,3*	69,3*	58,8*	58,8*	51,0*	51,0*	45,0*	45,0*	39,7*	39,7*	34,1*	34,1*															31,8*	31,8*	**56' 6"**
0	4 pt. outriggers down	44,7*	44,7*	84,9*	84,9*	69,8*	69,8*	59,0*	59,0*	50,9*	50,9*	44,3*	44,3*	38,4*	38,4*	31,4*	31,4*															30,0*	30,0*	**55' 8"**
– 5	4 pt. outriggers down	46,4*	46,4*	82,0*	82,0*	68,1*	68,1*	57,6*	57,6*	49,4*	49,4*	42,4*	42,4*	35,7*	35,7*																	31,9*	31,9*	**52' 5"**
–10	4 pt. outriggers down			75,3*	75,3*	63,5*	63,5*	53,9*	53,9*	45,9*	45,9*	38,5*	38,5*																			36,6*	36,6*	**46' 4"**
–15	4 pt. outriggers down																																	
–20	4 pt. outriggers down																																	

Height **Can be slewed through 360°** **In longitudinal position of undercarriage** **Max. reach** *** Limited by hydr. capacity**

The lift capacities on the stick end without attachment are stated in lb x 1,000 and are valid on a firm, level supporting surface with blocked oscillating axle. These capacities can be slewed through 360° with the undercarriage in the transverse position. Capacities in the longitudinal position of the undercarriage (+/– 15°) are specified over the rigid axle with the stabilizers down. Indicated loads based on the ISO 10567 standard and do not exceed 75 % of tipping or 87 % of hydraulic capacity. The lift capacity values indicated are attained at the corresponding operating temperature. This operating temperature is ensured by continuous movement of the boom. Weights of fitted attachments (grabs, load hooks, etc.) and load accommodation attachment are to be deducted from the lift capacity values. The lift capacity of the unit is limited by its stability, the lifting capability of the hydraulic elements, or the maximum permissible lifting capacity of the load hook.

LH 110 M – Equipment GG22

Port – Kinematic 2A

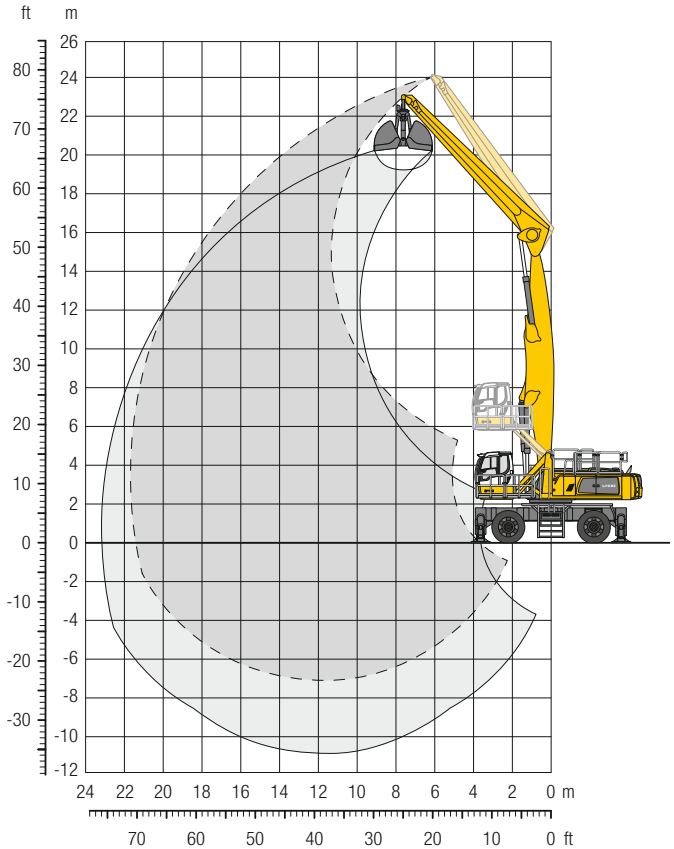

Operating Weight

The operating weight includes the basic machine with 4 point outriggers, hydr. cab elevation, 4 solid tyres, straight boom 37'9", straight stick 34'5" and grab for loose material GMZ 120/ 7.85 yd³.

Weight	224,900 lb

Dimensions

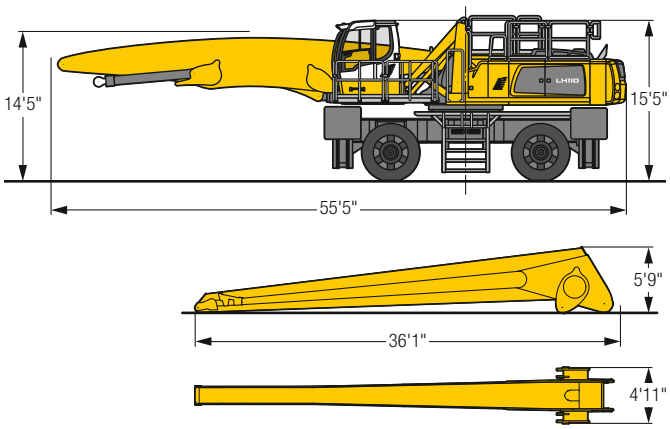

ft	Undercarriage	20 ft		25 ft		30 ft		35 ft		40 ft		45 ft		50 ft		55 ft		60 ft		65 ft		70 ft		75 ft		80 ft		85 ft		90 ft				ft in
75	4 pt. outriggers down					35,8*	35,8*																									34,5*	34,5*	30' 8"
70	4 pt. outriggers down							37,0*	37,0*																							29,0*	29,0*	39' 7"
65	4 pt. outriggers down							40,9*	40,9*	36,5*	36,5*	29,0*	29,0*																			26,0*	26,0*	46' 4"
60	4 pt. outriggers down									36,8*	36,8*	34,7*	34,7*	28,0*	28,0*																	24,1*	24,1*	51' 7"
55	4 pt. outriggers down									36,0*	36,0*	33,9*	33,9*	32,2*	32,2*	25,5*	25,5*															22,8*	22,8*	56'
50	4 pt. outriggers down									35,7*	35,7*	33,6*	33,6*	31,8*	31,8*	30,3*	30,3*															21,9*	21,9*	59' 7"
45	4 pt. outriggers down									35,8*	35,8*	33,6*	33,6*	31,7*	31,7*	30,1*	30,1*	28,0*	28,0*													21,3*	21,3*	62' 7"
40	4 pt. outriggers down									36,2*	36,2*	33,9*	33,9*	31,8*	31,8*	30,1*	30,1*	28,7*	28,7*	21,1*	21,1*											20,8*	20,8*	65' 1"
35	4 pt. outriggers down							40,1*	40,1*	37,0*	37,0*	34,4*	34,4*	32,2*	32,2*	30,4*	30,4*	28,7*	28,7*	26,8*	26,8*											20,6*	20,6*	67' 1"
30	4 pt. outriggers down							41,7*	41,7*	38,1*	38,1*	35,2*	35,2*	32,8*	32,8*	30,8*	30,8*	29,0*	29,0*	27,3*	27,3*											20,5*	20,5*	68' 7"
25	4 pt. outriggers down					48,8*	48,8*	43,6*	43,6*	39,6*	39,6*	36,3*	36,3*	33,6*	33,6*	31,3*	31,3*	29,3*	29,3*	27,4*	27,4*											20,5*	20,5*	69'10"
20	4 pt. outriggers down			58,2*	58,2*	52,1*	52,1*	45,9*	45,9*	41,2*	41,2*	37,4*	37,4*	34,4*	34,4*	31,8*	31,8*	29,6*	29,6*	27,6*	27,6*	23,0*	23,0*									20,6*	20,6*	70' 7"
15	4 pt. outriggers down	81,5*	81,5*	65,9*	65,9*	55,6*	55,6*	48,4*	48,4*	42,9*	42,9*	38,7*	38,7*	35,2*	35,2*	32,4*	32,4*	29,9*	29,9*	27,6*	27,6*	25,0*	25,0*									20,9*	20,9*	71'
10	4 pt. outriggers down	90,5*	90,5*	71,3*	71,3*	59,2*	59,2*	50,7*	50,7*	44,6*	44,6*	39,8*	39,8*	36,0*	36,0*	32,9*	32,9*	30,2*	30,2*	27,6*	27,6*	24,7*	24,7*									21,3*	21,3*	71' 1"
5	4 pt. outriggers down	58,1*	58,1*	75,7*	75,7*	62,1*	62,1*	52,8*	52,8*	46,0*	46,0*	40,8*	40,8*	36,7*	36,7*	33,2*	33,2*	30,2*	30,2*	27,3*	27,3*	23,8*	23,8*									21,9*	21,9*	70'10"
0	4 pt. outriggers down	36,0*	36,0*	78,6*	78,6*	64,2*	64,2*	54,3*	54,3*	47,0*	47,0*	41,5*	41,5*	37,0*	37,0*	33,3*	33,3*	30,0*	30,0*	26,7*	26,7*	22,3*	22,3*									22,1*	22,1*	70' 2"
– 5	4 pt. outriggers down	32,2*	32,2*	62,5*	62,5*	65,0*	65,0*	54,9*	54,9*	47,4*	47,4*	41,6*	41,6*	36,9*	36,9*	32,9*	32,9*	29,3*	29,3*	25,4*	25,4*											21,0*	21,0*	69' 1"
–10	4 pt. outriggers down	32,8*	32,8*	55,0*	55,0*	64,2*	64,2*	54,4*	54,4*	46,9*	46,9*	41,0*	41,0*	36,2*	36,2*	31,9*	31,9*	27,8*	27,8*	23,2*	23,2*											22,0*	22,0*	66'
–15	4 pt. outriggers down	35,1*	35,1*	53,7*	53,7*	61,5*	61,5*	52,4*	52,4*	45,3*	45,3*	39,4*	39,4*	34,5*	34,5*	29,9*	29,9*	25,3*	25,3*													24,0*	24,0*	61' 2"
–20	4 pt. outriggers down			55,3*	55,3*	56,5*	56,5*	48,6*	48,6*	42,1*	42,1*	36,5*	36,5*	31,4*	31,4*																	28,1*	28,1*	53' 6"

Height **Can be slewed through 360°** **In longitudinal position of undercarriage** **Max. reach** *** Limited by hydr. capacity**

The lift capacities on the stick end without attachment are stated in lb x 1,000 and are valid on a firm, level supporting surface with blocked oscillating axle. These capacities can be slewed through 360° with the undercarriage in the transverse position. Capacities in the longitudinal position of the undercarriage (+/– 15°) are specified over the rigid axle with the stabilizers down. Indicated loads based on the ISO 10567 standard and do not exceed 75 % of tipping or 87 % of hydraulic capacity. The lift capacity values indicated are attained at the corresponding operating temperature. This operating temperature is ensured by continuous movement of the boom. Weights of fitted attachments (grabs, load hooks, etc.) and load accommodation attachment are to be deducted from the lift capacity values. The lift capacity of the unit is limited by its stability, the lifting capability of the hydraulic elements, or the maximum permissible lifting capacity of the load hook.

LH 110 M HR – Equipment AG24

Port – Kinematic 2D

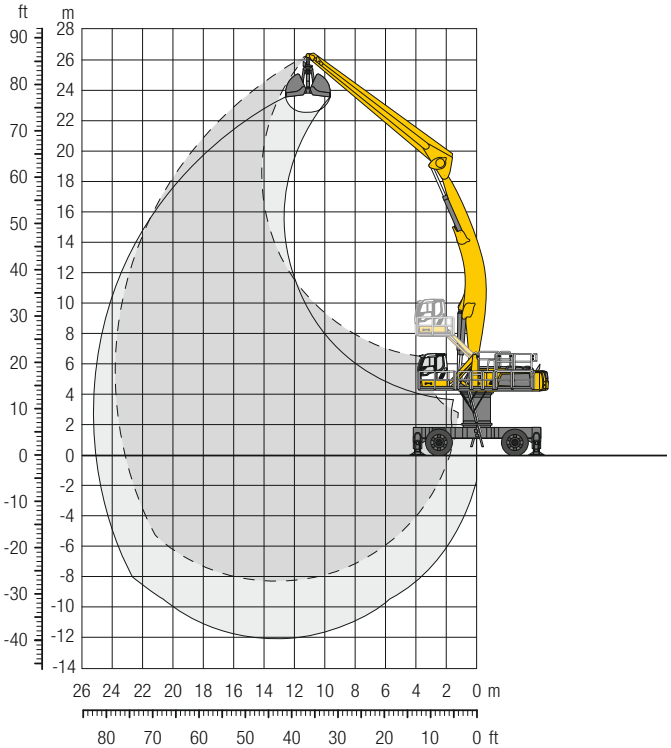

Operating Weight

The operating weight includes the basic machine with 4 point outriggers, turret 6'7", hydr. cab elevation, 4 solid tyres, angled boom 42'8", straight stick 39'4" and grab for loose material GMZ 120/6.54 yd³.

Weight	244,700 lb

Dimensions

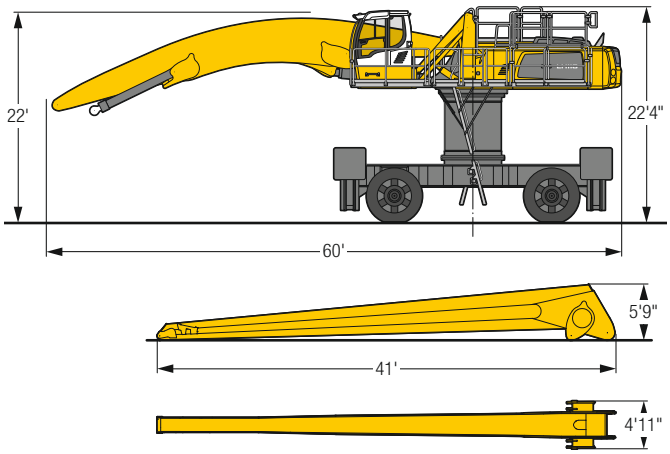

ft	Undercarriage	20 ft		25 ft		30 ft		35 ft		40 ft		45 ft		50 ft		55 ft		60 ft		65 ft		70 ft		75 ft		80 ft		85 ft		90 ft				ft in
90	4 pt. outriggers down																																	
85	4 pt. outriggers down																															23,6*	23,6*	39' 6"
80	4 pt. outriggers down											23,9*	23,9*																			21,3*	21,3*	47' 1"
75	4 pt. outriggers down											26,1*	26,1*	23,8*	23,8*																	19,9*	19,9*	53' 1"
70	4 pt. outriggers down													24,2*	24,2*	23,1*	23,1*															19,0*	19,0*	58' 1"
65	4 pt. outriggers down													23,8*	23,8*	22,8*	22,8*	21,6*	21,6*													18,3*	18,3*	62' 4"
60	4 pt. outriggers down													23,7*	23,7*	22,6*	22,6*	21,8*	21,8*	19,1*	19,1*											17,8*	17,8*	65'10"
55	4 pt. outriggers down													23,7*	23,7*	22,6*	22,6*	21,7*	21,7*	21,0*	21,0*											17,5*	17,5*	68' 8"
50	4 pt. outriggers down											25,4*	25,4*	24,0*	24,0*	22,8*	22,8*	21,8*	21,8*	21,0*	21,0*	19,6*	19,6*									17,4*	17,4*	71' 2"
45	4 pt. outriggers down											25,9*	25,9*	24,4*	24,4*	23,2*	23,2*	22,1*	22,1*	21,1*	21,1*	20,4*	20,4*									17,3*	17,3*	73' 4"
40	4 pt. outriggers down											26,7*	26,7*	25,1*	25,1*	23,6*	23,6*	22,4*	22,4*	21,4*	21,4*	20,5*	20,5*									17,4*	17,4*	74'11"
35	4 pt. outriggers down									30,0*	30,0*	27,7*	27,7*	25,8*	25,8*	24,2*	24,2*	22,9*	22,9*	21,7*	21,7*	20,8*	20,8*	20,0*	20,0*							17,5*	17,5*	76' 2"
30	4 pt. outriggers down							34,9*	34,9*	31,6*	31,6*	28,9*	28,9*	26,7*	26,7*	24,9*	24,9*	23,4*	23,4*	22,1*	22,1*	21,1*	21,1*	20,2*	20,2*							17,7*	17,7*	77' 2"
25	4 pt. outriggers down			49,7*	49,7*	42,5*	42,5*	37,3*	37,3*	33,3*	33,3*	30,2*	30,2*	27,7*	27,7*	25,7*	25,7*	24,0*	24,0*	22,6*	22,6*	21,4*	21,4*	20,4*	20,4*							18,1*	18,1*	77'10"
20	4 pt. outriggers down	69,1*	69,1*	55,1*	55,1*	46,1*	46,1*	39,8*	39,8*	35,2*	35,2*	31,6*	31,6*	28,8*	28,8*	26,5*	26,5*	24,7*	24,7*	23,1*	23,1*	21,8*	21,8*	20,6*	20,6*							18,5*	18,5*	78'
15	4 pt. outriggers down	77,5*	77,5*	60,4*	60,4*	49,6*	49,6*	42,3*	42,3*	37,0*	37,0*	33,0*	33,0*	29,9*	29,9*	27,4*	27,4*	25,3*	25,3*	23,6*	23,6*	22,1*	22,1*	20,8*	20,8*							19,1*	19,1*	78'
10	4 pt. outriggers down	44,7*	44,7*	65,0*	65,0*	52,9*	52,9*	44,7*	44,7*	38,8*	38,8*	34,4*	34,4*	30,9*	30,9*	28,2*	28,2*	25,9*	25,9*	24,1*	24,1*	22,4*	22,4*	20,9*	20,9*							19,8*	19,8*	77' 7"
5	4 pt. outriggers down	32,3*	32,3*	60,6*	60,6*	55,6*	55,6*	46,7*	46,7*	40,4*	40,4*	35,6*	35,6*	31,9*	31,9*	28,9*	28,9*	26,5*	26,5*	24,4*	24,4*	22,6*	22,6*	20,9*	20,9*							20,2*	20,2*	76'11"
0	4 pt. outriggers down	29,1*	29,1*	47,1*	47,1*	57,6*	57,6*	48,3*	48,3*	41,7*	41,7*	36,6*	36,6*	32,7*	32,7*	29,5*	29,5*	26,9*	26,9*	24,7*	24,7*	22,7*	22,7*	20,7*	20,7*							20,3*	20,3*	75'10"
– 5	4 pt. outriggers down	28,8*	28,8*	42,3*	42,3*	58,7*	58,7*	49,4*	49,4*	42,5*	42,5*	37,3*	37,3*	33,2*	33,2*	29,9*	29,9*	27,1*	27,1*	24,7*	24,7*	22,5*	22,5*									20,4*	20,4*	74' 5"
–10	4 pt. outriggers down	29,6*	29,6*	40,9*	40,9*	58,9*	58,9*	49,7*	49,7*	42,9*	42,9*	37,6*	37,6*	33,4*	33,4*	29,9*	29,9*	27,0*	27,0*	24,4*	24,4*	21,8*	21,8*									20,3*	20,3*	72' 8"
–15	4 pt. outriggers down	30,9*	30,9*	40,9*	40,9*	57,9*	57,9*	49,2*	49,2*	42,5*	42,5*	37,3*	37,3*	33,1*	33,1*	29,5*	29,5*	26,4*	26,4*	23,6*	23,6*	20,5*	20,5*									20,2*	20,2*	70' 6"
–20	4 pt. outriggers down			41,9*	41,9*	55,7*	55,7*	47,6*	47,6*	41,3*	41,3*	36,3*	36,3*	32,1*	32,1*	28,4*	28,4*	25,2*	25,2*	21,9*	21,9*											21,4*	21,4*	65' 8"
–25	4 pt. outriggers down							44,8*	44,8*	39,0*	39,0*	34,2*	34,2*	30,1*	30,1*	26,4*	26,4*															25,9*	25,9*	55' 8"
–30	4 pt. outriggers down																																	

Height **Can be slewed through 360°** **In longitudinal position of undercarriage** **Max. reach** *** Limited by hydr. capacity**

The lift capacities on the stick end without attachment are stated in lb x 1,000 and are valid on a firm, level supporting surface with blocked oscillating axle. These capacities can be slewed through 360° with the undercarriage in the transverse position. Capacities in the longitudinal position of the undercarriage (+/– 15°) are specified over the rigid axle with the stabilizers down. Indicated loads based on the ISO 10567 standard and do not exceed 75 % of tipping or 87 % of hydraulic capacity. The lift capacity values indicated are attained at the corresponding operating temperature. This operating temperature is ensured by continuous movement of the boom. Weights of fitted attachments (grabs, load hooks, etc.) and load accommodation attachment are to be deducted from the lift capacity values. The lift capacity of the unit is limited by its stability, the lifting capability of the hydraulic elements, or the maximum permissible lifting capacity of the load hook.

LH 110 M HR – Equipment AG27

Port – Kinematic 2D

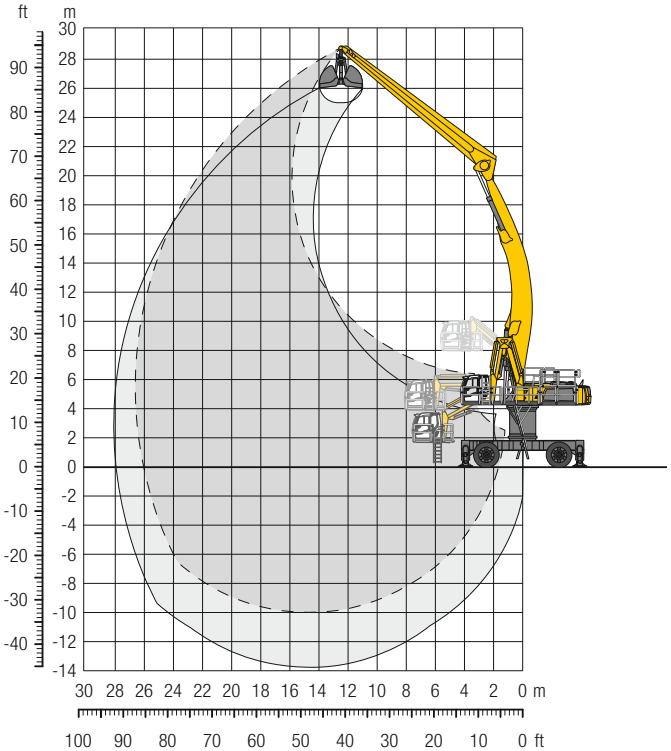

Operating Weight

The operating weight includes the basic machine with 4 point outriggers, turret 6'7", hydr. cab elevation, 4 solid tyres, angled boom 47'7", straight stick 44'3" and grab for loose material GMZ 120 / 5.88 yd³.

Weight	252,700 lb

Dimensions

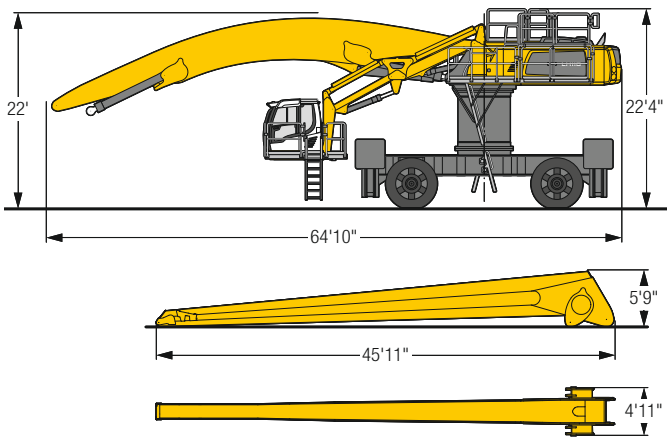

ft	Undercarriage	20 ft		25 ft		30 ft		35 ft		40 ft		45 ft		50 ft		55 ft		60 ft		65 ft		70 ft		75 ft		80 ft		85 ft		90 ft				ft in
90	4 pt. outriggers down											22,7*	22,7*																			19,2*	19,2*	**48'11"**
85	4 pt. outriggers down													22,7*	22,7*	18,5*	18,5*															17,8*	17,8*	**55' 7"**
80	4 pt. outriggers down													22,1*	22,1*	20,9*	20,9*	18,2*	18,2*													16,8*	16,8*	**61' 2"**
75	4 pt. outriggers down															20,5*	20,5*	19,5*	19,5*	17,3*	17,3*											16,2*	16,2*	**66'**
70	4 pt. outriggers down															20,3*	20,3*	19,2*	19,2*	18,4*	18,4*	15,7*	15,7*									15,7*	15,7*	**70'**
65	4 pt. outriggers down															20,2*	20,2*	19,1*	19,1*	18,2*	18,2*	17,5*	17,5*									15,3*	15,3*	**73' 6"**
60	4 pt. outriggers down															20,2*	20,2*	19,1*	19,1*	18,2*	18,2*	17,4*	17,4*	16,8*	16,8*							15,1*	15,1*	**76' 6"**
55	4 pt. outriggers down															20,4*	20,4*	19,2*	19,2*	18,2*	18,2*	17,4*	17,4*	16,7*	16,7*							14,9*	14,9*	**79'**
50	4 pt. outriggers down													22,0*	22,0*	20,6*	20,6*	19,4*	19,4*	18,4*	18,4*	17,5*	17,5*	16,7*	16,7*	16,1*	16,1*					14,8*	14,8*	**81' 2"**
45	4 pt. outriggers down													22,4*	22,4*	21,0*	21,0*	19,7*	19,7*	18,6*	18,6*	17,6*	17,6*	16,8*	16,8*	16,1*	16,1*					14,8*	14,8*	**83'**
40	4 pt. outriggers down											24,9*	24,9*	23,0*	23,0*	21,4*	21,4*	20,0*	20,0*	18,8*	18,8*	17,8*	17,8*	17,0*	17,0*	16,2*	16,2*					14,9*	14,9*	**84' 6"**
35	4 pt. outriggers down									28,3*	28,3*	25,8*	25,8*	23,7*	23,7*	21,9*	21,9*	20,4*	20,4*	19,2*	19,2*	18,1*	18,1*	17,2*	17,2*	16,4*	16,4*	15,7*	15,7*			15,1*	15,1*	**85' 7"**
30	4 pt. outriggers down							33,1*	33,1*	29,6*	29,6*	26,7*	26,7*	24,4*	24,4*	22,5*	22,5*	20,9*	20,9*	19,6*	19,6*	18,4*	18,4*	17,4*	17,4*	16,5*	16,5*	15,8*	15,8*			15,3*	15,3*	**86' 5"**
25	4 pt. outriggers down					40,5*	40,5*	35,1*	35,1*	31,0*	31,0*	27,8*	27,8*	25,3*	25,3*	23,2*	23,2*	21,4*	21,4*	20,0*	20,0*	18,7*	18,7*	17,7*	17,7*	16,7*	16,7*	15,9*	15,9*			15,6*	15,6*	**87'**
20	4 pt. outriggers down	65,9*	65,9*	52,2*	52,2*	43,3*	43,3*	37,1*	37,1*	32,5*	32,5*	28,9*	28,9*	26,1*	26,1*	23,9*	23,9*	22,0*	22,0*	20,4*	20,4*	19,1*	19,1*	17,9*	17,9*	16,9*	16,9*	16,0*	16,0*			15,6*	15,6*	**87' 2"**
15	4 pt. outriggers down	72,6*	72,6*	56,3*	56,3*	46,1*	46,1*	39,1*	39,1*	33,9*	33,9*	30,1*	30,1*	27,0*	27,0*	24,6*	24,6*	22,5*	22,5*	20,9*	20,9*	19,4*	19,4*	18,2*	18,2*	17,1*	17,1*	16,1*	16,1*			15,6*	15,6*	**87' 2"**
10	4 pt. outriggers down	33,0*	33,0*	59,9*	59,9*	48,6*	48,6*	40,9*	40,9*	35,4*	35,4*	31,1*	31,1*	27,9*	27,9*	25,2*	25,2*	23,1*	23,1*	21,3*	21,3*	19,8*	19,8*	18,4*	18,4*	17,3*	17,3*	16,1*	16,1*			15,7*	15,7*	**86'10"**
5	4 pt. outriggers down	24,2*	24,2*	43,5*	43,5*	50,8*	50,8*	42,6*	42,6*	36,6*	36,6*	32,2*	32,2*	28,7*	28,7*	25,9*	25,9*	23,6*	23,6*	21,7*	21,7*	20,1*	20,1*	18,6*	18,6*	17,4*	17,4*	16,1*	16,1*			15,8*	15,8*	**86' 2"**
0	4 pt. outriggers down	22,0*	22,0*	34,6*	34,6*	52,4*	52,4*	43,9*	43,9*	37,7*	37,7*	33,0*	33,0*	29,4*	29,4*	26,4*	26,4*	24,0*	24,0*	22,0*	22,0*	20,3*	20,3*	18,8*	18,8*	17,4*	17,4*	15,9*	15,9*			15,8*	15,8*	**85' 4"**
– 5	4 pt. outriggers down	21,8*	21,8*	31,5*	31,5*	48,3*	48,3*	44,8*	44,8*	38,5*	38,5*	33,7*	33,7*	29,9*	29,9*	26,8*	26,8*	24,3*	24,3*	22,2*	22,2*	20,4*	20,4*	18,8*	18,8*	17,2*	17,2*					15,8*	15,8*	**84'**
–10	4 pt. outriggers down	22,6*	22,6*	30,5*	30,5*	43,7*	43,7*	45,2*	45,2*	38,9*	38,9*	34,0*	34,0*	30,2*	30,2*	27,1*	27,1*	24,5*	24,5*	22,3*	22,3*	20,3*	20,3*	18,6*	18,6*	16,8*	16,8*					15,8*	15,8*	**82' 6"**
–15	4 pt. outriggers down	23,7*	23,7*	30,7*	30,7*	41,9*	41,9*	45,1*	45,1*	38,9*	38,9*	34,0*	34,0*	30,2*	30,2*	27,0*	27,0*	24,4*	24,4*	22,1*	22,1*	20,0*	20,0*	18,1*	18,1*	16,0*	16,0*					15,7*	15,7*	**80' 7"**
–20	4 pt. outriggers down	25,0*	25,0*	31,4*	31,4*	41,4*	41,4*	44,2*	44,2*	38,3*	38,3*	33,6*	33,6*	29,8*	29,8*	26,6*	26,6*	23,9*	23,9*	21,5*	21,5*	19,3*	19,3*	17,1*	17,1*							15,5*	15,5*	**78' 4"**
–25	4 pt. outriggers down			32,4*	32,4*	41,9*	41,9*	42,5*	42,5*	37,0*	37,0*	32,5*	32,5*	28,9*	28,9*	25,7*	25,7*	23,0*	23,0*	20,5*	20,5*	18,1*	18,1*									16,6*	16,6*	**73'**
–30	4 pt. outriggers down							39,7*	39,7*	34,8*	34,8*	30,7*	30,7*	27,3*	27,3*	24,2*	24,2*	21,5*	21,5*													19,8*	19,8*	**63' 1"**

Height **Can be slewed through 360°** **In longitudinal position of undercarriage** **Max. reach** *** Limited by hydr. capacity**

The lift capacities on the stick end without attachment are stated in lb x 1,000 and are valid on a firm, level supporting surface with blocked oscillating axle. These capacities can be slewed through 360° with the undercarriage in the transverse position. Capacities in the longitudinal position of the undercarriage (+/– 15°) are specified over the rigid axle with the stabilizers down. Indicated loads based on the ISO 10567 standard and do not exceed 75 % of tipping or 87 % of hydraulic capacity. The lift capacity values indicated are attained at the corresponding operating temperature. This operating temperature is ensured by continuous movement of the boom. Weights of fitted attachments (grabs, load hooks, etc.) and load accommodation attachment are to be deducted from the lift capacity values. The lift capacity of the unit is limited by its stability, the lifting capability of the hydraulic elements, or the maximum permissible lifting capacity of the load hook.

LH 110 C – Equipment AG21

Port – Kinematic 2D

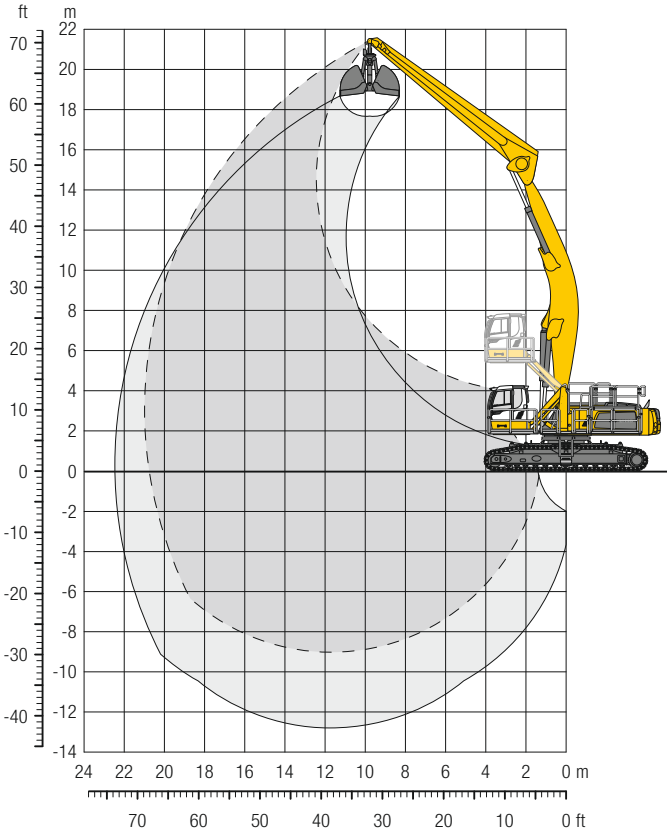

Operating Weight and Ground Pressure

The operating weight includes the basic machine with hydr. cab elevation, angled boom 37'9", straight stick 34'5" and grab for loose material GMZ 120/7.85 yd³.

Weight	242,000 lb
Pad width	30"
Ground pressure	on request

Dimensions

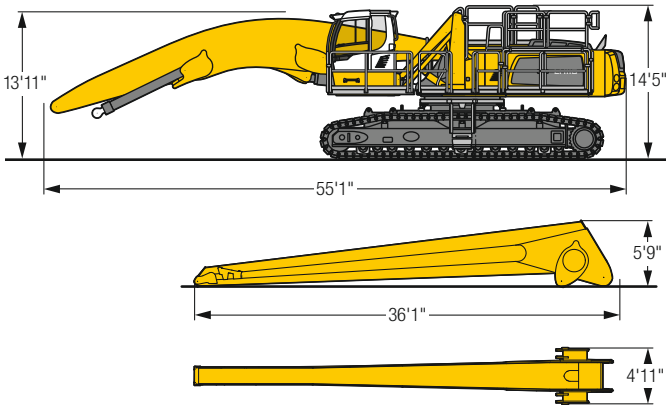

ft	Undercarriage	20 ft		25 ft		30 ft		35 ft		40 ft		45 ft		50 ft		55 ft		60 ft		65 ft		70 ft		75 ft		80 ft		85 ft		90 ft				ft in
70	SW																															28,6*	28,6*	32'10"
65	SW									26,6*	26,6*																					25,3*	25,3*	40'10"
60	SW									30,8*	30,8*	26,7*	26,7*																			23,4*	23,4*	46'11"
55	SW									29,8*	29,8*	28,7*	28,7*	25,5*	25,5*																	22,2*	22,2*	51'10"
50	SW											28,2*	28,2*	27,3*	27,3*	23,1*	23,1*															21,4*	21,4*	55'10"
45	SW											28,1*	28,1*	27,1*	27,1*	26,3*	26,3*															20,9*	20,9*	59' 2"
40	SW									29,7*	29,7*	28,3*	28,3*	27,2*	27,2*	26,3*	26,3*	24,7*	24,7*													20,6*	20,6*	61'11"
35	SW									30,4*	30,4*	28,9*	28,9*	27,6*	27,6*	26,5*	26,5*	25,6*	25,6*													20,5*	20,5*	64' 1"
30	SW									31,6*	31,6*	29,8*	29,8*	28,2*	28,2*	26,9*	26,9*	25,9*	25,9*	22,7*	22,7*											20,5*	20,5*	65'11"
25	SW							35,8*	35,8*	33,1*	33,1*	30,9*	30,9*	29,1*	29,1*	27,5*	27,5*	26,3*	26,3*	25,3*	25,3*											20,7*	20,7*	67' 2"
20	SW					42,6*	42,6*	38,3*	38,3*	34,9*	34,9*	32,3*	32,3*	30,1*	30,1*	28,3*	28,3*	26,8*	26,8*	25,6*	25,6*											21,0*	21,0*	68' 1"
15	SW	65,9*	65,9*	54,4*	54,4*	46,6*	46,6*	41,1*	41,1*	37,0*	37,0*	33,8*	33,8*	31,2*	31,2*	29,1*	29,1*	27,4*	27,4*	26,0*	26,0*											21,4*	21,4*	68' 8"
10	SW	76,4*	76,4*	60,7*	60,7*	50,9*	50,9*	44,1*	44,1*	39,1*	39,1*	35,4*	35,4*	32,4*	32,4*	30,0*	30,0*	28,1*	28,1*	26,4*	26,4*											22,1*	22,1*	68'10"
5	SW	85,9*	85,9*	66,8*	66,8*	55,0*	55,0*	47,0*	47,0*	41,3*	41,3*	37,0*	37,0*	33,6*	33,6*	30,9*	30,9*	28,7*	28,7*	26,4	26,8*											22,9*	22,9*	68' 8"
0	SW	53,8*	53,8*	71,8*	71,8*	58,5*	58,5*	49,6*	49,6*	43,2*	43,2*	38,4*	38,4*	34,7*	34,7*	31,7*	31,7*	29,2*	29,2*	26,0	27,0*											23,9*	23,9*	68' 1"
– 5	SW	42,3*	42,3*	75,4*	75,4*	61,4*	61,4*	51,8*	51,8*	44,8*	44,8*	39,7*	39,7*	35,6*	35,6*	32,3*	32,3*	28,8	29,6*	25,7	27,0*											24,5	25,1*	67' 1"
–10	SW	39,4*	39,4*	64,3*	64,3*	63,2*	63,2*	53,2*	53,2*	46,0*	46,0*	40,5*	40,5*	36,2*	36,2*	32,2	32,6*	28,5	29,5*	25,5	26,5*											25,1	25,9*	65'10"
–15	SW	39,4*	39,4*	59,0*	59,0*	63,7*	63,7*	53,8*	53,8*	46,5*	46,5*	40,8*	40,8*	36,2	36,3*	31,8	32,4*	28,3	28,9*													25,9	25,9*	64'
–20	SW	40,6*	40,6*	57,6*	57,6*	62,9*	62,9*	53,3*	53,3*	46,1*	46,1*	40,3*	40,3*	35,6*	35,6*	31,5*	31,5*	27,4*	27,4*													25,7*	25,7*	61'10"
–25	SW			58,5*	58,5*	60,3*	60,3*	51,4*	51,4*	44,5*	44,5*	38,8*	38,8*	33,9*	33,9*	29,3*	29,3*															28,7*	28,7*	55' 7"

Height **Can be slewed through 360°** **In longitudinal position of undercarriage** **Max. reach** *** Limited by hydr. capacity**

The lift capacities on the stick end without attachment are stated in lb x 1,000 and can be slewed through 360° on a firm, level supporting surface. Capacities are valid for 30" wide flat pads. Indicated loads based on the ISO 10567 standard and do not exceed 75 % of tipping or 87 % of hydraulic capacity. The lift capacity values indicated are attained at the corresponding operating temperature. This operating temperature is ensured by continuous movement of the boom. Weights of fitted attachments (grabs, load hooks, etc.) and load accommodation attachment are to be deducted from the lift capacity values. The lift capacity of the unit is limited by its stability, the lifting capability of the hydraulic elements, or the maximum permissible lifting capacity of the load hook.

LH 110 C – Equipment GG19

Port – Kinematic 2A

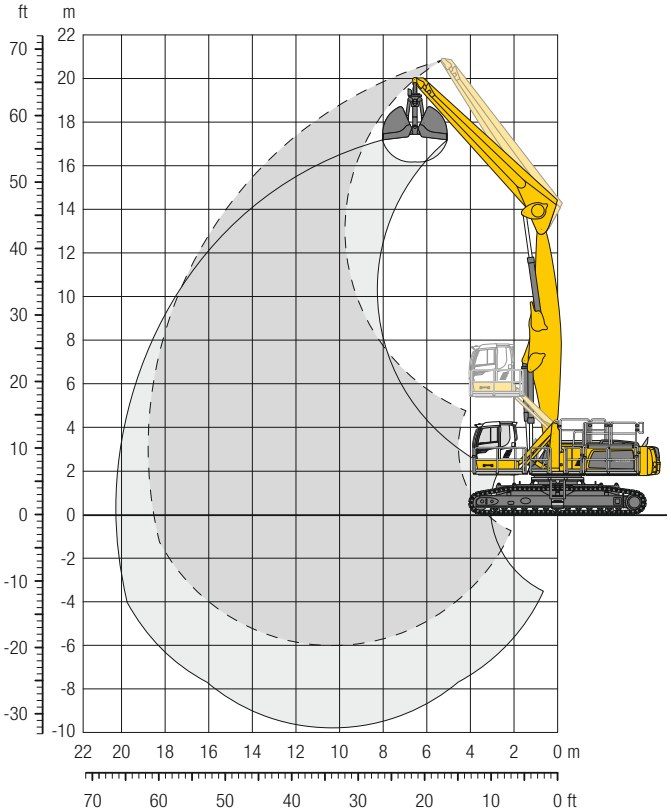

Operating Weight and Ground Pressure

The operating weight includes the basic machine with hydr. cab elevation, straight boom 32'10", straight stick 29'6" and grab for loose material GMZ 120/10.46 yd³.

Weight	239,100 lb
Pad width	30"
Ground pressure	on request

Dimensions

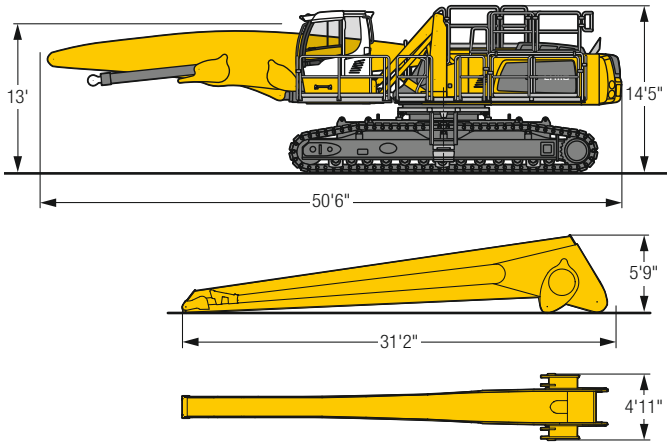

ft	Undercarriage	20 ft		25 ft		30 ft		35 ft		40 ft		45 ft		50 ft		55 ft		60 ft		65 ft		70 ft		75 ft		80 ft		85 ft		90 ft		ft in
70	SW																															
65	SW			44,9*	44,9*																									41,0*	41,0*	26' 6"
60	SW					45,5*	45,5*	34,9*	34,9*																					34,0*	34,0*	35' 4"
55	SW					48,3*	48,3*	44,5*	44,5*	35,2*	35,2*																			30,3*	30,3*	41' 7"
50	SW							43,4*	43,4*	41,0*	41,0*	33,2*	33,2*																	28,1*	28,1*	46' 7"
45	SW							42,6*	42,6*	40,2*	40,2*	38,4*	38,4*	28,6*	28,6*															26,6*	26,6*	50' 6"
40	SW							42,5*	42,5*	40,0*	40,0*	38,0*	38,0*	36,4*	36,4*															25,7*	25,7*	53' 8"
35	SW							43,2*	43,2*	40,4*	40,4*	38,1*	38,1*	36,2*	36,2*	30,1*	30,1*													25,1*	25,1*	56' 2"
30	SW					48,2*	48,2*	44,4*	44,4*	41,3*	41,3*	38,7*	38,7*	36,5*	36,5*	34,6*	34,6*													24,7*	24,7*	58' 2"
25	SW					50,9*	50,9*	46,3*	46,3*	42,6*	42,6*	39,5*	39,5*	37,0*	37,0*	34,8*	34,8*													24,6*	24,6*	59' 8"
20	SW			61,8*	61,8*	54,3*	54,3*	48,6*	48,6*	44,2*	44,2*	40,6*	40,6*	37,7*	37,7*	35,1*	35,1*	28,6*	28,6*											24,7*	24,7*	60'10"
15	SW	82,2*	82,2*	67,8*	67,8*	58,2*	58,2*	51,2*	51,2*	46,0*	46,0*	41,8*	41,8*	38,4*	38,4*	35,4*	35,4*	31,0	32,0*											24,9*	24,9*	61' 5"
10	SW	92,7*	92,7*	74,1*	74,1*	62,1*	62,1*	53,9*	53,9*	47,7*	47,7*	43,0*	43,0*	39,1*	39,1*	35,1	35,7*	30,8	32,0*											25,4*	25,4*	61' 7"
5	SW	101,5*	101,5*	79,5*	79,5*	65,7*	65,7*	56,2*	56,2*	49,3*	49,3*	43,9*	43,9*	39,5*	39,5*	34,7	35,6*	30,6	31,2*											26,1*	26,1*	61' 5"
0	SW	64,4*	64,4*	83,2*	83,2*	68,2*	68,2*	57,9*	57,9*	50,3*	50,3*	44,5*	44,5*	39,2	39,6*	34,3	35,0*	29,6*	29,6*											27,1*	27,1*	60'10"
– 5	SW	51,6*	51,6*	84,3*	84,3*	69,2*	69,2*	58,5*	58,5*	50,5*	50,5*	44,2*	44,2*	38,8	38,8*	33,5*	33,5*													27,3*	27,3*	59' 5"
–10	SW	50,1*	50,1*	82,5*	82,5*	68,1*	68,1*	57,6*	57,6*	49,5*	49,5*	42,9*	42,9*	36,9*	36,9*	30,5*	30,5*													29,3*	29,3*	55'10"
–15	SW	52,5*	52,5*	77,1*	77,1*	64,4*	64,4*	54,6*	54,6*	46,6*	46,6*	39,8*	39,8*																	33,2*	33,2*	49'11"
–20	SW																															
–25	SW																															

Height **Can be slewed through 360°** **In longitudinal position of undercarriage** **Max. reach** *** Limited by hydr. capacity**

The lift capacities on the stick end without attachment are stated in lb x 1,000 and can be slewed through 360° on a firm, level supporting surface. Capacities are valid for 30" wide flat pads. Indicated loads based on the ISO 10567 standard and do not exceed 75 % of tipping or 87 % of hydraulic capacity. The lift capacity values indicated are attained at the corresponding operating temperature. This operating temperature is ensured by continuous movement of the boom. Weights of fitted attachments (grabs, load hooks, etc.) and load accommodation attachment are to be deducted from the lift capacity values. The lift capacity of the unit is limited by its stability, the lifting capability of the hydraulic elements, or the maximum permissible lifting capacity of the load hook.

LH 110 C HR – Equipment AG24

Port – Kinematic 2D

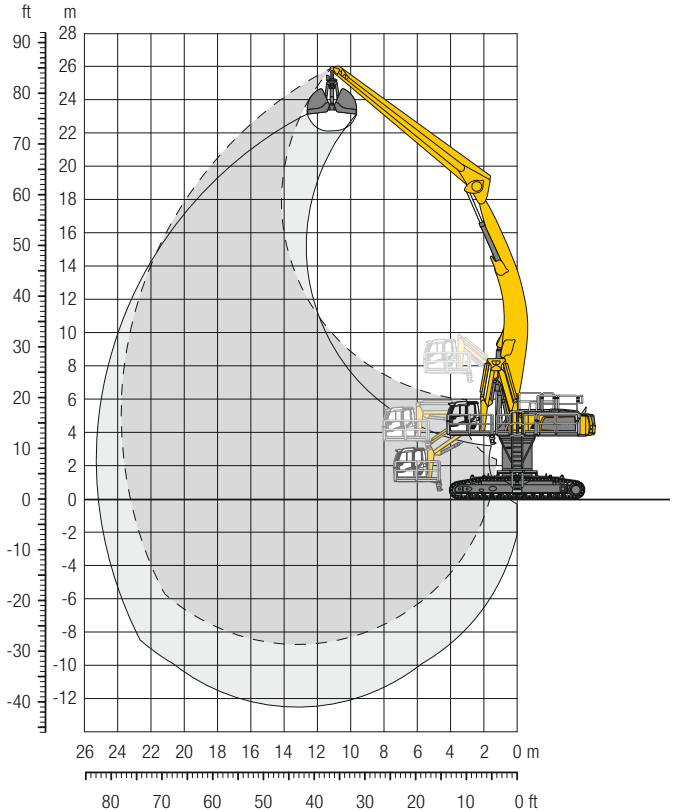

Operating Weight and Ground Pressure

The operating weight includes the basic machine with turret 6'7", hydr. cab elevation, angled boom 42'8", straight stick 39'4" and grab for loose material GMZ 120 / 6.54 yd³.

Weight	259,200 lb
Pad width	30"
Ground pressure	on request

Dimensions

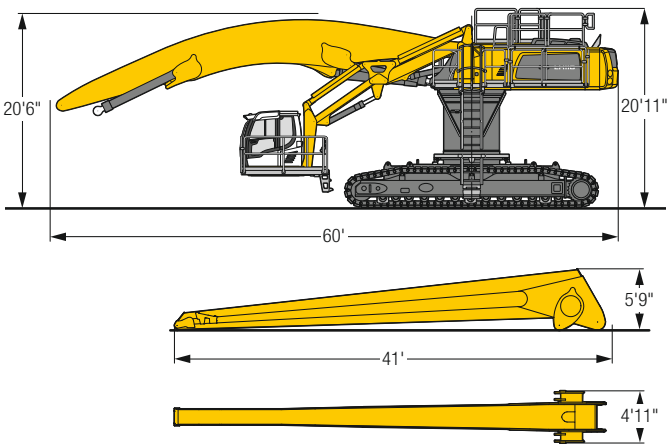

ft	Undercarriage	20 ft		25 ft		30 ft		35 ft		40 ft		45 ft		50 ft		55 ft		60 ft		65 ft		70 ft		75 ft		80 ft		85 ft		90 ft				ft in
85	SW																																	
80	SW																															22,0*	22,0*	44'10"
75	SW											26,4*	26,4*	22,0*	22,0*																	20,3*	20,3*	51' 4"
70	SW											25,6*	25,6*	24,4*	24,4*	21,4*	21,4*															19,2*	19,2*	56' 7"
65	SW													23,9*	23,9*	23,0*	23,0*	20,0*	20,0*													18,5*	18,5*	61'
60	SW													23,7*	23,7*	22,7*	22,7*	21,9*	21,9*													18,0*	18,0*	64' 8"
55	SW													23,7*	23,7*	22,6*	22,6*	21,7*	21,7*	21,1*	21,1*											17,6*	17,6*	67'10"
50	SW													23,9*	23,9*	22,7*	22,7*	21,8*	21,8*	21,0*	21,0*	18,2*	18,2*									17,4*	17,4*	70' 5"
45	SW											25,7*	25,7*	24,3*	24,3*	23,0*	23,0*	22,0*	22,0*	21,1*	21,1*	20,4*	20,4*									17,3*	17,3*	72' 7"
40	SW											26,5*	26,5*	24,8*	24,8*	23,5*	23,5*	22,3*	22,3*	21,3*	21,3*	20,5*	20,5*									17,3*	17,3*	74' 5"
35	SW									29,6*	29,6*	27,4*	27,4*	25,6*	25,6*	24,0*	24,0*	22,7*	22,7*	21,6*	21,6*	20,7*	20,7*	19,2*	19,2*							17,5*	17,5*	75'10"
30	SW							34,2*	34,2*	31,1*	31,1*	28,5*	28,5*	26,4*	26,4*	24,7*	24,7*	23,2*	23,2*	22,0*	22,0*	21,0*	21,0*	20,1*	20,1*							17,7*	17,7*	76'11"
25	SW					41,4*	41,4*	36,5*	36,5*	32,7*	32,7*	29,8*	29,8*	27,4*	27,4*	25,4*	25,4*	23,8*	23,8*	22,4*	22,4*	21,3*	21,3*	20,3*	20,3*							18,0*	18,0*	77' 7"
20	SW	66,1*	66,1*	53,3*	53,3*	44,9*	44,9*	39,0*	39,0*	34,6*	34,6*	31,2*	31,2*	28,5*	28,5*	26,3*	26,3*	24,5*	24,5*	22,9*	22,9*	21,6*	21,6*	20,5*	20,5*							18,4*	18,4*	78'
15	SW	74,9*	74,9*	58,7*	58,7*	48,5*	48,5*	41,5*	41,5*	36,4*	36,4*	32,6*	32,6*	29,5*	29,5*	27,1*	27,1*	25,1*	25,1*	23,4*	23,4*	22,0*	22,0*	20,7*	20,7*							18,9*	18,9*	78'
10	SW	55,1*	55,1*	63,5*	63,5*	51,9*	51,9*	43,9*	43,9*	38,2*	38,2*	33,9*	33,9*	30,6*	30,6*	27,9*	27,9*	25,7*	25,7*	23,9*	23,9*	22,3*	22,3*	20,9*	20,9*							19,5*	19,5*	77'10"
5	SW	34,7*	34,7*	67,5*	67,5*	54,8*	54,8*	46,1*	46,1*	39,9*	39,9*	35,2*	35,2*	31,6*	31,6*	28,7*	28,7*	26,3*	26,3*	24,3*	24,3*	22,6*	22,6*	20,9*	20,9*							20,2*	20,2*	77' 2"
0	SW	29,7*	29,7*	50,1*	50,1*	57,0*	57,0*	47,9*	47,9*	41,3*	41,3*	36,3*	36,3*	32,4*	32,4*	29,3*	29,3*	26,8*	26,8*	24,6*	24,6*	22,7*	22,7*	20,8*	20,8*							20,3*	20,3*	76' 2"
– 5	SW	28,7*	28,7*	43,4*	43,4*	58,4*	58,4*	49,1*	49,1*	42,3*	42,3*	37,1*	37,1*	33,1*	33,1*	29,8*	29,8*	27,1*	27,1*	24,7*	24,7*	22,6*	22,6*									20,4*	20,4*	74'11"
–10	SW	29,2*	29,2*	41,1*	41,1*	58,9*	58,9*	49,7*	49,7*	42,8*	42,8*	37,5*	37,5*	33,4*	33,4*	30,0*	30,0*	27,1*	27,1*	24,5*	24,5*	22,1*	22,1*									20,4*	20,4*	73' 4"
–15	SW	30,4*	30,4*	40,8*	40,8*	58,4*	58,4*	49,5*	49,5*	42,7*	42,7*	37,5*	37,5*	33,2*	33,2*	29,7*	29,7*	26,7*	26,7*	23,9*	23,9*	21,1*	21,1*									20,3*	20,3*	71' 2"
–20	SW	31,9*	31,9*	41,5*	41,5*	56,6*	56,6*	48,3*	48,3*	41,8*	41,8*	36,7*	36,7*	32,5*	32,5*	28,9*	28,9*	25,7*	25,7*	22,6*	22,6*											20,6*	20,6*	67'11"
–25	SW					53,3*	53,3*	45,9*	45,9*	39,9*	39,9*	35,0*	35,0*	30,9*	30,9*	27,2*	27,2*															23,9*	23,9*	59'11"

Height **Can be slewed through 360°** **In longitudinal position of undercarriage** **Max. reach** *** Limited by hydr. capacity**

The lift capacities on the stick end without attachment are stated in lb x 1,000 and can be slewed through 360° on a firm, level supporting surface. Capacities are valid for 30" wide flat pads. Indicated loads based on the ISO 10567 standard and do not exceed 75 % of tipping or 87 % of hydraulic capacity. The lift capacity values indicated are attained at the corresponding operating temperature. This operating temperature is ensured by continuous movement of the boom. Weights of fitted attachments (grabs, load hooks, etc.) and load accommodation attachment are to be deducted from the lift capacity values. The lift capacity of the unit is limited by its stability, the lifting capability of the hydraulic elements, or the maximum permissible lifting capacity of the load hook.

LH 110 C HR – Equipment GG25

Port – Kinematic 2A

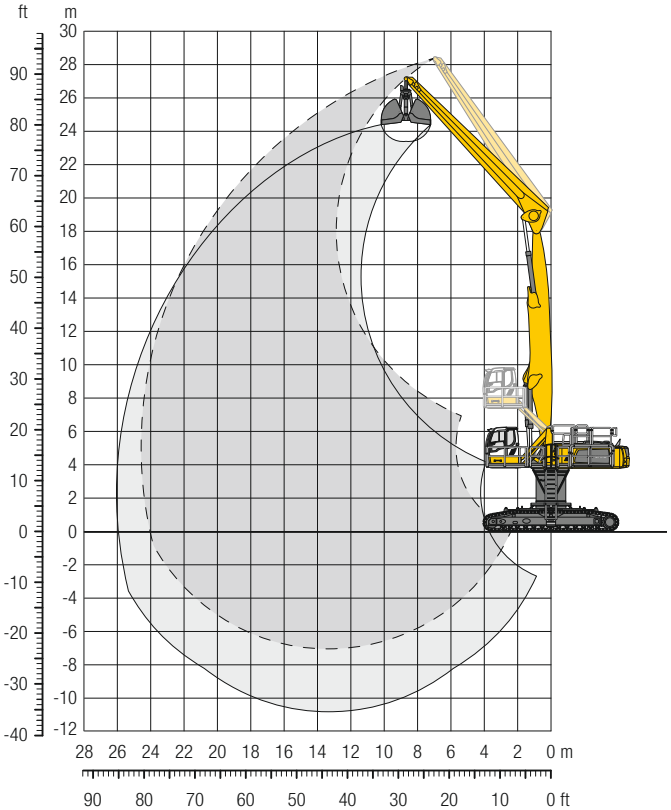

Operating Weight and Ground Pressure

The operating weight includes the basic machine with turret 6'7", hydr. cab elevation, straight boom 42'8", straight stick 39'4" and grab for loose material GMZ 120 / 6.54 yd³.

Weight	258,500 lb
Pad width	39"
Ground pressure	on request

Dimensions

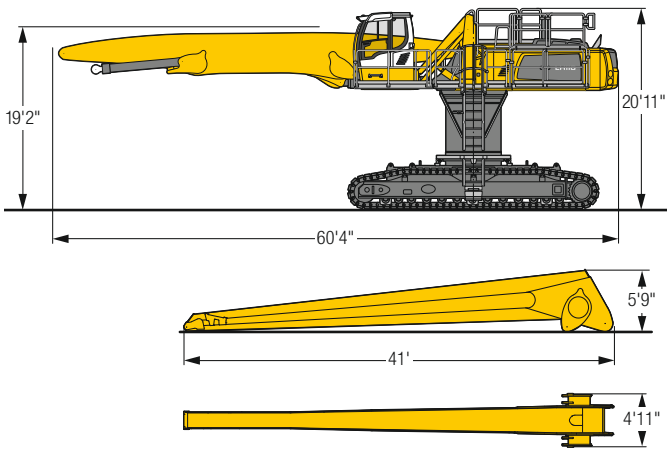

ft	Undercarriage	20 ft		25 ft		30 ft		35 ft		40 ft		45 ft		50 ft		55 ft		60 ft		65 ft		70 ft		75 ft		80 ft		85 ft		90 ft				ft in
90	SW					34,0*	34,0*																									31,3*	31,3*	**31'11"**
85	SW							34,4*	34,4*	28,9*	28,9*																					26,1*	26,1*	**41'10"**
80	SW									33,9*	33,9*	29,3*	29,3*																			23,3*	23,3*	**49' 2"**
75	SW									34,4*	34,4*	31,8*	31,8*	28,8*	28,8*	21,8*	21,8*															21,4*	21,4*	**55' 2"**
70	SW											31,1*	31,1*	29,1*	29,1*	27,5*	27,5*	20,4*	20,4*													20,2*	20,2*	**60' 1"**
65	SW											30,7*	30,7*	28,7*	28,7*	27,1*	27,1*	25,7*	25,7*													19,2*	19,2*	**64' 4"**
60	SW											30,5*	30,5*	28,5*	28,5*	26,9*	26,9*	25,4*	25,4*	23,9*	23,9*											18,6*	18,6*	**67'10"**
55	SW											30,6*	30,6*	28,5*	28,5*	26,8*	26,8*	25,3*	25,3*	24,1*	24,1*	19,9*	19,9*									18,1*	18,1*	**70'10"**
50	SW											30,8*	30,8*	28,7*	28,7*	26,9*	26,9*	25,3*	25,3*	24,0*	24,0*	22,8*	22,8*									17,7*	17,7*	**73' 4"**
45	SW									33,9*	33,9*	31,2*	31,2*	29,0*	29,0*	27,1*	27,1*	25,5*	25,5*	24,1*	24,1*	22,8*	22,8*	18,6*	18,6*							17,5*	17,5*	**75' 5"**
40	SW									34,7*	34,7*	31,9*	31,9*	29,5*	29,5*	27,5*	27,5*	25,7*	25,7*	24,2*	24,2*	22,8*	22,8*	21,6*	21,6*							17,4*	17,4*	**77' 1"**
35	SW							39,6*	39,6*	35,8*	35,8*	32,7*	32,7*	30,1*	30,1*	27,9*	27,9*	26,0*	26,0*	24,4*	24,4*	23,0*	23,0*	21,6*	21,6*							17,3*	17,3*	**78' 6"**
30	SW					44,9*	44,9*	41,3*	41,3*	37,1*	37,1*	33,6*	33,6*	30,8*	30,8*	28,4*	28,4*	26,4*	26,4*	24,7*	24,7*	23,1*	23,1*	21,6*	21,6*							17,4*	17,4*	**79' 6"**
25	SW			47,6*	47,6*	49,7*	49,7*	43,3*	43,3*	38,5*	38,5*	34,7*	34,7*	31,6*	31,6*	29,0*	29,0*	26,8*	26,8*	24,9*	24,9*	23,2*	23,2*	21,6*	21,6*	18,2*	18,2*					17,5*	17,5*	**80' 2"**
20	SW	71,0*	71,0*	63,0*	63,0*	52,7*	52,7*	45,4*	45,4*	40,0*	40,0*	35,7*	35,7*	32,4*	32,4*	29,6*	29,6*	27,2*	27,2*	25,2*	25,2*	23,3*	23,3*	21,6*	21,6*	19,5*	19,5*					17,7*	17,7*	**80' 7"**
15	SW	85,9*	85,9*	67,4*	67,4*	55,6*	55,6*	47,4*	47,4*	41,4*	41,4*	36,8*	36,8*	33,1*	33,1*	30,1*	30,1*	27,6*	27,6*	25,4*	25,4*	23,4*	23,4*	21,4*	21,4*	19,0*	19,0*					18,1*	18,1*	**80' 7"**
10	SW	35,5*	35,5*	71,0*	71,0*	58,0*	58,0*	49,1*	49,1*	42,6*	42,6*	37,7*	37,7*	33,7*	33,7*	30,5*	30,5*	27,8*	27,8*	25,5*	25,5*	23,3*	23,3*	21,1*	21,1*	18,3*	18,3*					18,0*	18,0*	**80' 5"**
5	SW	23,6*	23,6*	53,7*	53,7*	59,8*	59,8*	50,4*	50,4*	43,5*	43,5*	38,3*	38,3*	34,2*	34,2*	30,8*	30,8*	27,9*	27,9*	25,4*	25,4*	23,0*	23,0*	20,6*	20,6*							17,3*	17,3*	**79'10"**
0	SW	21,7*	21,7*	40,1*	40,1*	60,5*	60,5*	51,0*	51,0*	44,0*	44,0*	38,6*	38,6*	34,3*	34,3*	30,8*	30,8*	27,7*	27,7*	25,0*	25,0*	22,4*	22,4*	19,6*	19,6*							16,5*	16,5*	**78'11"**
– 5	SW	22,5*	22,5*	36,4*	36,4*	60,0*	60,0*	50,8*	50,8*	43,8*	43,8*	38,4*	38,4*	34,0*	34,0*	30,4*	30,4*	27,2*	27,2*	24,3*	24,3*	21,4*	21,4*	18,0*	18,0*							16,3*	16,3*	**76'11"**
–10	SW	24,4*	24,4*	36,0*	36,0*	57,7*	57,7*	49,5*	49,5*	42,9*	42,9*	37,5*	37,5*	33,2*	33,2*	29,5*	29,5*	26,2*	26,2*	23,1*	23,1*	19,8*	19,8*									17,4*	17,4*	**73' 1"**
–15	SW	26,9*	26,9*	37,2*	37,2*	54,6*	54,6*	47,0*	47,0*	40,9*	40,9*	35,8*	35,8*	31,6*	31,6*	27,9*	27,9*	24,4*	24,4*	21,0*	21,0*											19,1*	19,1*	**67' 8"**
–20	SW					49,3*	49,3*	43,0*	43,0*	37,7*	37,7*	33,1*	33,1*	29,0*	29,0*	25,3*	25,3*															22,4*	22,4*	**59' 1"**

Height **Can be slewed through 360°** **In longitudinal position of undercarriage** **Max. reach** *** Limited by hydr. capacity**

The lift capacities on the stick end without attachment are stated in lb x 1,000 and can be slewed through 360° on a firm, level supporting surface. Capacities are valid for 39" wide flat pads. Indicated loads based on the ISO 10567 standard and do not exceed 75 % of tipping or 87 % of hydraulic capacity. The lift capacity values indicated are attained at the corresponding operating temperature. This operating temperature is ensured by continuous movement of the boom. Weights of fitted attachments (grabs, load hooks, etc.) and load accommodation attachment are to be deducted from the lift capacity values. The lift capacity of the unit is limited by its stability, the lifting capability of the hydraulic elements, or the maximum permissible lifting capacity of the load hook.

LH 110 C Gantry – Equipment AG27

Port – Kinematic 2D

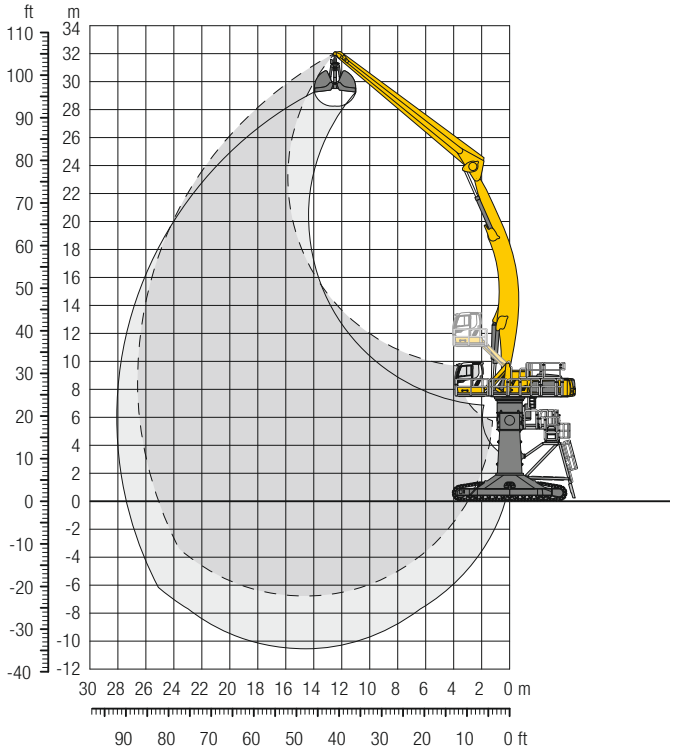

Operating Weight and Ground Pressure

The operating weight includes the basic machine with hydr. cab elevation, angled boom 47'7", straight stick 44'3" and grab for loose material GMZ 120 / 5.88 yd³.

Weight	316,600 lb
Pad width	30"
Ground pressure	on request

Dimensions

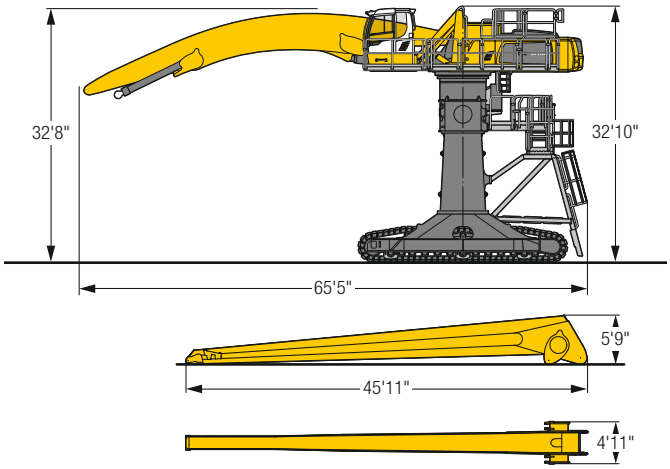

ft	Undercarriage	20 ft		25 ft		30 ft		35 ft		40 ft		45 ft		50 ft		55 ft		60 ft		65 ft		70 ft		75 ft		80 ft		85 ft		90 ft				ft in
105	Gantry																																	
100	Gantry											22,0*	22,0*																			19,5*	19,5*	47' 8"
95	Gantry													22,3*	22,3*																	18,0*	18,0*	54' 8"
90	Gantry													22,2*	22,2*	21,0*	21,0*	17,5*	17,5*													17,0*	17,0*	60' 5"
85	Gantry															20,6*	20,6*	19,5*	19,5*	16,6*	16,6*											16,3*	16,3*	65' 4"
80	Gantry															20,3*	20,3*	19,3*	19,3*	18,4*	18,4*											15,7*	15,7*	69' 5"
75	Gantry															20,2*	20,2*	19,1*	19,1*	18,2*	18,2*	17,5*	17,5*									15,3*	15,3*	73'
70	Gantry															20,2*	20,2*	19,1*	19,1*	18,2*	18,2*	17,4*	17,4*	16,5*	16,5*							15,1*	15,1*	76' 1"
65	Gantry															20,3*	20,3*	19,2*	19,2*	18,2*	18,2*	17,4*	17,4*	16,7*	16,7*							14,9*	14,9*	78' 8"
60	Gantry													21,9*	21,9*	20,6*	20,6*	19,4*	19,4*	18,3*	18,3*	17,5*	17,5*	16,7*	16,7*	16,1*	16,1*					14,8*	14,8*	80'11"
55	Gantry													22,4*	22,4*	20,9*	20,9*	19,6*	19,6*	18,5*	18,5*	17,6*	17,6*	16,8*	16,8*	16,1*	16,1*					14,8*	14,8*	82' 8"
50	Gantry											24,8*	24,8*	22,9*	22,9*	21,3*	21,3*	20,0*	20,0*	18,8*	18,8*	17,8*	17,8*	16,9*	16,9*	16,2*	16,2*					14,9*	14,9*	84' 4"
45	Gantry											25,6*	25,6*	23,6*	23,6*	21,8*	21,8*	20,4*	20,4*	19,1*	19,1*	18,1*	18,1*	17,1*	17,1*	16,3*	16,3*	15,7*	15,7*			15,0*	15,0*	85' 6"
40	Gantry									29,4*	29,4*	26,6*	26,6*	24,3*	24,3*	22,4*	22,4*	20,8*	20,8*	19,5*	19,5*	18,3*	18,3*	17,4*	17,4*	16,5*	16,5*	15,8*	15,8*			15,2*	15,2*	86' 4"
35	Gantry					40,0*	40,0*	34,8*	34,8*	30,8*	30,8*	27,6*	27,6*	25,1*	25,1*	23,1*	23,1*	21,4*	21,4*	19,9*	19,9*	18,7*	18,7*	17,6*	17,6*	16,7*	16,7*	15,9*	15,9*			15,5*	15,5*	86'11"
30	Gantry	64,9*	64,9*	51,5*	51,5*	42,8*	42,8*	36,8*	36,8*	32,2*	32,2*	28,8*	28,8*	26,0*	26,0*	23,8*	23,8*	21,9*	21,9*	20,3*	20,3*	19,0*	19,0*	17,9*	17,9*	16,9*	16,9*	16,0*	16,0*			15,6*	15,6*	87' 2"
25	Gantry	71,6*	71,6*	55,7*	55,7*	45,7*	45,7*	38,7*	38,7*	33,7*	33,7*	29,9*	29,9*	26,9*	26,9*	24,4*	24,4*	22,5*	22,5*	20,8*	20,8*	19,4*	19,4*	18,2*	18,2*	17,1*	17,1*	16,1*	16,1*			15,6*	15,6*	87' 2"
20	Gantry	35,8*	35,8*	59,4*	59,4*	48,3*	48,3*	40,6*	40,6*	35,1*	35,1*	31,0*	31,0*	27,7*	27,7*	25,1*	25,1*	23,0*	23,0*	21,2*	21,2*	19,7*	19,7*	18,4*	18,4*	17,2*	17,2*	16,1*	16,1*			15,7*	15,7*	86'11"
15	Gantry	25,0*	25,0*	46,0*	46,0*	50,5*	50,5*	42,3*	42,3*	36,4*	36,4*	32,0*	32,0*	28,5*	28,5*	25,8*	25,8*	23,5*	23,5*	21,6*	21,6*	20,0*	20,0*	18,6*	18,6*	17,3*	17,3*	16,1*	16,1*			15,8*	15,8*	86' 4"
10	Gantry	22,2*	22,2*	35,5*	35,5*	52,2*	52,2*	43,7*	43,7*	37,5*	37,5*	32,9*	32,9*	29,3*	29,3*	26,3*	26,3*	24,0*	24,0*	22,0*	22,0*	20,3*	20,3*	18,8*	18,8*	17,4*	17,4*	15,9*	15,9*			15,8*	15,8*	85' 5"
5	Gantry	21,8*	21,8*	31,8*	31,8*	49,4*	49,4*	44,7*	44,7*	38,4*	38,4*	33,6*	33,6*	29,8*	29,8*	26,8*	26,8*	24,3*	24,3*	22,2*	22,2*	20,4*	20,4*	18,8*	18,8*	17,2*	17,2*					15,8*	15,8*	84' 4"
0	Gantry	22,4*	22,4*	30,6*	30,6*	44,2*	44,2*	45,2*	45,2*	38,9*	38,9*	34,0*	34,0*	30,2*	30,2*	27,0*	27,0*	24,5*	24,5*	22,3*	22,3*	20,4*	20,4*	18,6*	18,6*	16,9*	16,9*					15,8*	15,8*	82' 8"
– 5	Gantry	23,5*	23,5*	30,6*	30,6*	42,0*	42,0*	45,1*	45,1*	38,9*	38,9*	34,1*	34,1*	30,2*	30,2*	27,0*	27,0*	24,4*	24,4*	22,1*	22,1*	20,1*	20,1*	18,2*	18,2*	16,1*	16,1*					15,7*	15,7*	80'11"
–10	Gantry	24,7*	24,7*	31,2*	31,2*	41,4*	41,4*	44,4*	44,4*	38,4*	38,4*	33,7*	33,7*	29,9*	29,9*	26,7*	26,7*	24,0*	24,0*	21,7*	21,7*	19,5*	19,5*	17,3*	17,3*							15,5*	15,5*	78' 7"
–15	Gantry			32,2*	32,2*	41,8*	41,8*	42,8*	42,8*	37,2*	37,2*	32,8*	32,8*	29,1*	29,1*	25,9*	25,9*	23,2*	23,2*	20,7*	20,7*	18,4*	18,4*									16,3*	16,3*	74' 1"
–20	Gantry							40,2*	40,2*	35,2*	35,2*	31,1*	31,1*	27,6*	27,6*	24,5*	24,5*	21,8*	21,8*	19,1*	19,1*											19,1*	19,1*	65' 2"

Height **Can be slewed through 360°** **In longitudinal position of undercarriage** **Max. reach** *** Limited by hydr. capacity**

The lift capacities on the stick end without attachment are stated in lb x 1,000 and can be slewed through 360° on a firm, level supporting surface. Capacities are valid for 30" wide flat pads. Indicated loads based on the ISO 10567 standard and do not exceed 75 % of tipping or 87 % of hydraulic capacity. The lift capacity values indicated are attained at the corresponding operating temperature. This operating temperature is ensured by continuous movement of the boom. Weights of fitted attachments (grabs, load hooks, etc.) and load accommodation attachment are to be deducted from the lift capacity values. The lift capacity of the unit is limited by its stability, the lifting capability of the hydraulic elements, or the maximum permissible lifting capacity of the load hook.

LH 110 C Gantry – Equipment GG28

Port – Kinematic 2A

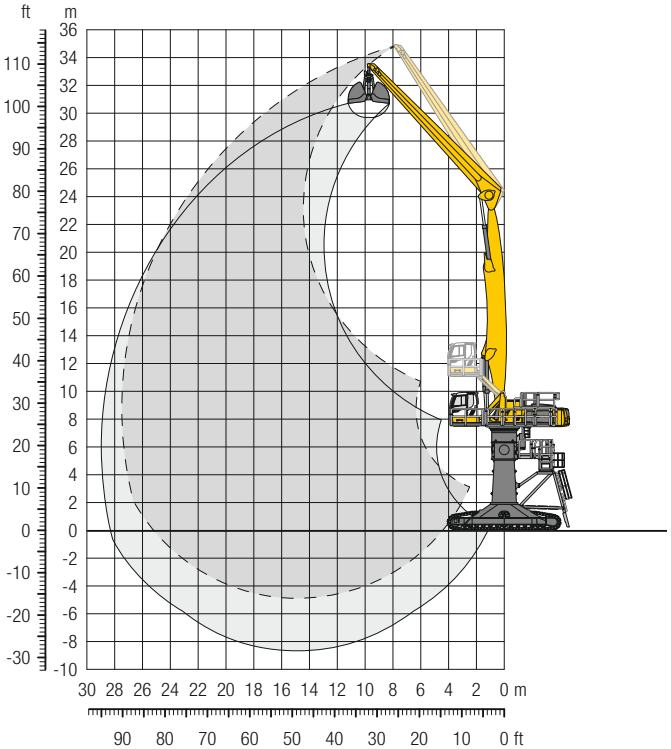

Operating Weight and Ground Pressure

The operating weight includes the basic machine with hydr. cab elevation, straight boom 47'7", straight stick 44'3" and grab for loose material GMZ 120/5.88 yd³.

Weight	316,000 lb
Pad width	30"
Ground pressure	on request

Dimensions

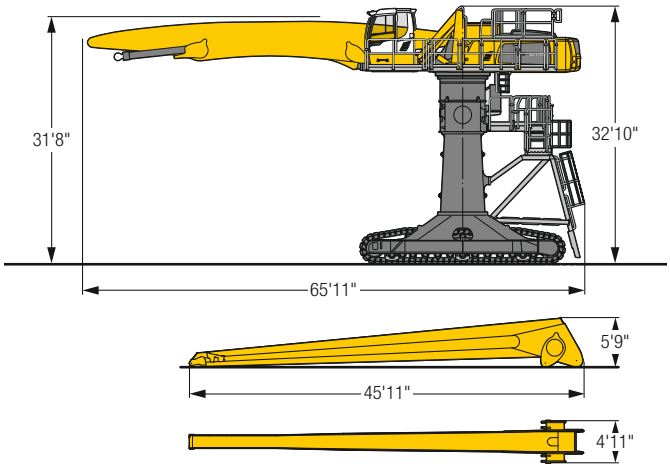

ft	Undercarriage	20 ft		25 ft		30 ft		35 ft		40 ft		45 ft		50 ft		55 ft		60 ft		65 ft		70 ft		75 ft		80 ft		85 ft		90 ft				ft in
110	Gantry																															27,7*	27,7*	**34'10"**
105	Gantry									28,6*	28,6*	23,3*	23,3*																			23,2*	23,2*	**45' 1"**
100	Gantry									31,6*	31,6*	28,5*	28,5*	24,2*	24,2*																	20,7*	20,7*	**52'11"**
95	Gantry											30,0*	30,0*	27,6*	27,6*	24,1*	24,1*															19,0*	19,0*	**59' 4"**
90	Gantry											29,4*	29,4*	27,1*	27,1*	25,2*	25,2*	23,5*	23,5*													17,9*	17,9*	**64' 7"**
85	Gantry													26,7*	26,7*	24,8*	24,8*	23,3*	23,3*	21,9*	21,9*											17,0*	17,0*	**69' 1"**
80	Gantry													26,5*	26,5*	24,6*	24,6*	23,0*	23,0*	21,7*	21,7*	20,5*	20,5*									16,3*	16,3*	**73' 1"**
75	Gantry													26,4*	26,4*	24,5*	24,5*	22,9*	22,9*	21,5*	21,5*	20,3*	20,3*	18,3*	18,3*							15,8*	15,8*	**76' 6"**
70	Gantry													26,4*	26,4*	24,5*	24,5*	22,9*	22,9*	21,5*	21,5*	20,2*	20,2*	19,1*	19,1*							15,5*	15,5*	**79' 5"**
65	Gantry													26,6*	26,6*	24,6*	24,6*	23,0*	23,0*	21,5*	21,5*	20,2*	20,2*	19,1*	19,1*	18,1*	18,1*					15,2*	15,2*	**81'11"**
60	Gantry											29,2*	29,2*	26,8*	26,8*	24,8*	24,8*	23,1*	23,1*	21,6*	21,6*	20,3*	20,3*	19,1*	19,1*	18,0*	18,0*					15,0*	15,0*	**84'**
55	Gantry											29,6*	29,6*	27,2*	27,2*	25,1*	25,1*	23,3*	23,3*	21,7*	21,7*	20,4*	20,4*	19,1*	19,1*	18,0*	18,0*	16,6*	16,6*			14,9*	14,9*	**85'10"**
50	Gantry									33,4*	33,4*	30,2*	30,2*	27,6*	27,6*	25,4*	25,4*	23,5*	23,5*	21,9*	21,9*	20,5*	20,5*	19,2*	19,2*	18,0*	18,0*	16,9*	16,9*			14,8*	14,8*	**87' 4"**
45	Gantry									34,3*	34,3*	30,9*	30,9*	28,1*	28,1*	25,8*	25,8*	23,8*	23,8*	22,1*	22,1*	20,6*	20,6*	19,3*	19,3*	18,1*	18,1*	16,9*	16,9*			14,9*	14,9*	**88' 5"**
40	Gantry							39,9*	39,9*	35,4*	35,4*	31,7*	31,7*	28,7*	28,7*	26,3*	26,3*	24,2*	24,2*	22,4*	22,4*	20,8*	20,8*	19,4*	19,4*	18,1*	18,1*	16,8*	16,8*			14,9*	14,9*	**89' 4"**
35	Gantry			41,5*	41,5*	48,2*	48,2*	41,5*	41,5*	36,5*	36,5*	32,5*	32,5*	29,3*	29,3*	26,7*	26,7*	24,5*	24,5*	22,6*	22,6*	21,0*	21,0*	19,5*	19,5*	18,1*	18,1*	16,8*	16,8*			15,1*	15,1*	**89'11"**
30	Gantry			61,0*	61,0*	50,5*	50,5*	43,1*	43,1*	37,6*	37,6*	33,3*	33,3*	29,9*	29,9*	27,2*	27,2*	24,8*	24,8*	22,8*	22,8*	21,1*	21,1*	19,6*	19,6*	18,1*	18,1*	16,6*	16,6*	14,8*	14,8*	14,8*	14,8*	**90' 1"**
25	Gantry			64,2*	64,2*	52,6*	52,6*	44,5*	44,5*	38,6*	38,6*	34,1*	34,1*	30,5*	30,5*	27,6*	27,6*	25,1*	25,1*	23,0*	23,0*	21,2*	21,2*	19,6*	19,6*	18,0*	18,0*	16,4*	16,4*	14,4*	14,4*	14,3*	14,3*	**90' 1"**
20	Gantry	21,1*	21,1*	61,1*	61,1*	54,3*	54,3*	45,8*	45,8*	39,5*	39,5*	34,7*	34,7*	31,0*	31,0*	27,9*	27,9*	25,3*	25,3*	23,2*	23,2*	21,2*	21,2*	19,5*	19,5*	17,8*	17,8*	16,1*	16,1*			13,8*	13,8*	**89'10"**
15	Gantry	15,6*	15,6*	33,3*	33,3*	55,4*	55,4*	46,6*	46,6*	40,1*	40,1*	35,2*	35,2*	31,3*	31,3*	28,1*	28,1*	25,4*	25,4*	23,2*	23,2*	21,2*	21,2*	19,3*	19,3*	17,5*	17,5*	15,6*	15,6*			13,3*	13,3*	**89' 4"**
10	Gantry	15,0*	15,0*	26,8*	26,8*	50,5*	50,5*	46,9*	46,9*	40,4*	40,4*	35,4*	35,4*	31,4*	31,4*	28,1*	28,1*	25,4*	25,4*	23,0*	23,0*	20,9*	20,9*	18,9*	18,9*	17,0*	17,0*	14,8*	14,8*			12,6*	12,6*	**88' 5"**
5	Gantry	16,1*	16,1*	25,3*	25,3*	41,8*	41,8*	46,6*	46,6*	40,2*	40,2*	35,2*	35,2*	31,2*	31,2*	27,9*	27,9*	25,1*	25,1*	22,6*	22,6*	20,4*	20,4*	18,3*	18,3*	16,2*	16,2*	13,5*	13,5*			12,0*	12,0*	**87'**
0	Gantry	17,8*	17,8*	25,6*	25,6*	38,7*	38,7*	45,5*	45,5*	39,4*	39,4*	34,5*	34,5*	30,6*	30,6*	27,3*	27,3*	24,5*	24,5*	22,0*	22,0*	19,7*	19,7*	17,4*	17,4*	14,9*	14,9*					12,6*	12,6*	**83' 8"**
– 5	Gantry	19,8*	19,8*	26,8*	26,8*	38,1*	38,1*	43,4*	43,4*	37,9*	37,9*	33,3*	33,3*	29,5*	29,5*	26,3*	26,3*	23,4*	23,4*	20,9*	20,9*	18,4*	18,4*	15,9*	15,9*							13,5*	13,5*	**79' 2"**
–10	Gantry			28,5*	28,5*	38,8*	38,8*	40,3*	40,3*	35,4*	35,4*	31,3*	31,3*	27,8*	27,8*	24,6*	24,6*	21,8*	21,8*	19,2*	19,2*	16,6*	16,6*									15,1*	15,1*	**72'10"**
–15	Gantry							36,0*	36,0*	32,0*	32,0*	28,4*	28,4*	25,2*	25,2*	22,3*	22,3*	19,5*	19,5*													18,2*	18,2*	**62' 5"**

Height **Can be slewed through 360°** **In longitudinal position of undercarriage** **Max. reach** *** Limited by hydr. capacity**

The lift capacities on the stick end without attachment are stated in lb x 1,000 and can be slewed through 360° on a firm, level supporting surface. Capacities are valid for 30" wide flat pads. Indicated loads based on the ISO 10567 standard and do not exceed 75 % of tipping or 87 % of hydraulic capacity. The lift capacity values indicated are attained at the corresponding operating temperature. This operating temperature is ensured by continuous movement of the boom. Weights of fitted attachments (grabs, load hooks, etc.) and load accommodation attachment are to be deducted from the lift capacity values. The lift capacity of the unit is limited by its stability, the lifting capability of the hydraulic elements, or the maximum permissible lifting capacity of the load hook.

Attachments

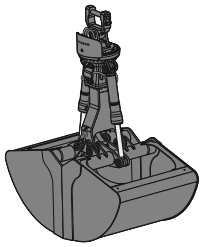

Grab for Loose Material

Shells for loose material with cutting edge (without teeth)

Grab model GMZ 50								
Width of shells	ft in	4'7"	5'3"	5'11"	6'7"	7'3"	7'10"	10'6"
Capacity	yd³	4.58	5.23	5.88	6.54	7.19	7.85	10.46
Loose material, specific weight up to	lb/yd³	1,854	1,854	1,854	1,854	1,854	1,854	1,854
Weight	lb	5,765	6,050	6,215	6,515	6,800	7,090	8,265
Grab model GMZ 80								
Width of shells	ft in	4'3"	4'11"	5'9"	6'7"	7'3"	8'6"	11'2"
Capacity	yd³	3.92	4.58	5.23	5.88	6.54	7.85	10.46
Weight	lb	5,535	5,785	6,105	6,480	6,690	7,200	8,225
Grab model GMZ 120								
Width of shells	ft in	5'11"	6'7"	7'10"	10'6"			
Capacity	yd³	5.88	6.54	7.85	10.46			
Weight	lb	7,055	7,350	7,960	9,170			

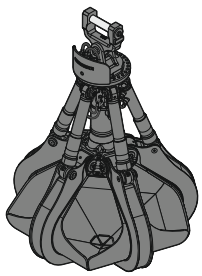

Multi-Tine Grab

		closed			
Grab model GMM 80-5 (5 tines)					
Capacity	yd³	1.44*	1.83*	2.22*	
Weight	lb	5,380	5,690	6,040	
Grab model GMM 120-5 (5 tines)					
Capacity	yd³	2.22	2.62	3.27	3.92

* heart-shaped

Wood Grab

Grab model GMH 50 round-shaped (overlapping, horizontal cylinders)						
Size	yd²	2.99	2.99	3.35	3.83	4.31
Cutting width	ft in	2'10"	3'3"	3'3"	3'3"	3'3"
Height of grab, closed	ft in	7'11"	7'11"	8'3"	8'8"	9'3"
Weight	lb	4,630	4,795	4,980	5,105	5,225
Grab model GMH 80 round-shaped (complete overlapping, vertical cylinders)						
Size	yd²	1.91	2.27	2.63	2.99	
Cutting width	ft in	2'10"	2'10"	2'10"	2'10"	
Height of grab, closed	ft in	9'6"	9'9"	10'1"	10'4"	
Weight	lb	4,980	5,080	5,160	5,245	
Grab model GMH 120 round-shaped ((complete overlapping, vertical cylinders)						
Size	yd²	3.35	3.83			
Cutting width	ft in	2'10"	2'10"			
Height of grab, closed	ft in	11'9"	12'1"			
Weight	lb	6,105	6,175			

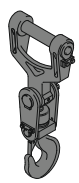

Load Hook

Max. load	lb	55,115
Weight	lb	562

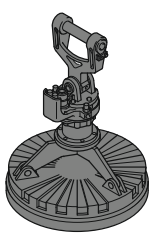

Magnet Devices / Lifting Magnets

Generator	kW	30	30
Electromagnet with suspension			
Power	kW	17.8	22
Diameter of magnet	ft in	5'7"	6'3"
Weight	lb	7,230*	11,220*

* only magnet plate

Liebherr ERC-System

Efficiency as standard

ERC System –
More Performance, Less Consumption

Lowering the equipment stores energy in the ERC system. This stored energy is then made available to the machine to provide additional engine power. When the equipment is raised the stored energy is released and is reflected in powerful, homogeneous operating cycles. The result is a clear saving on fuel – and, at the same time, even greater performance.

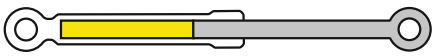

(B) 1. Equipment fitting raised / Energy released

2. Lower equipment fitting / Store energy
4. Raise equipment fitting / Release energy

(A) 3. Equipment fitting lowered / Energy stored

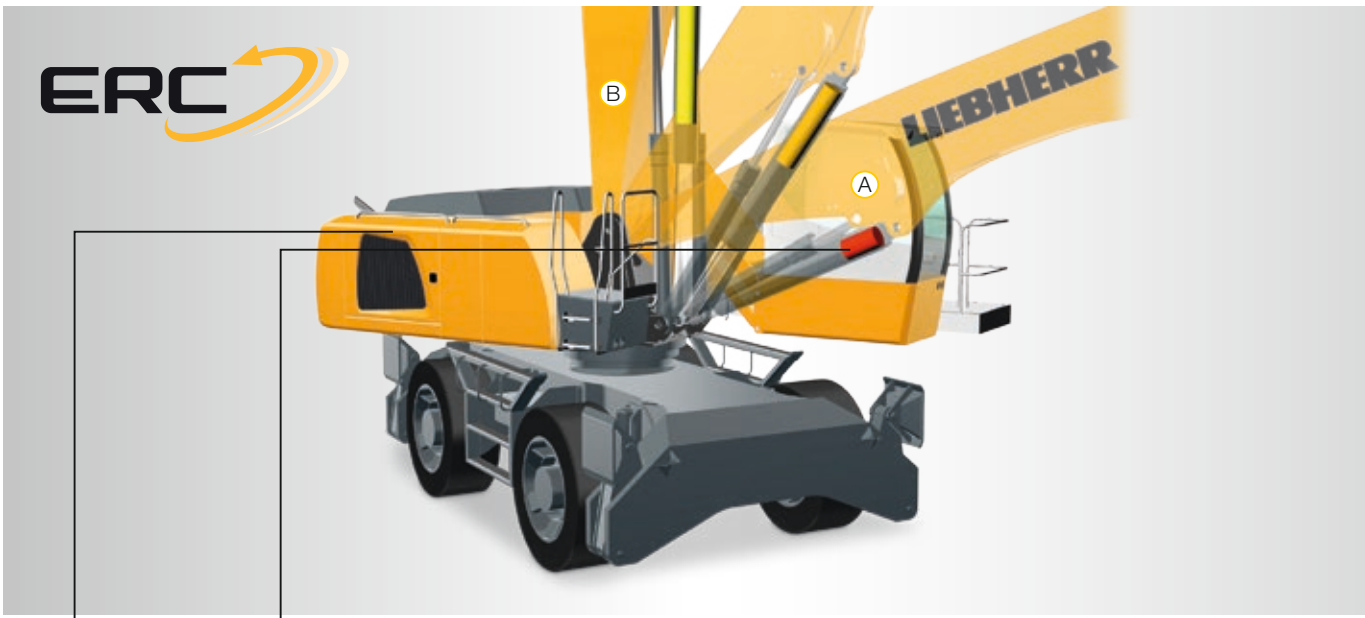

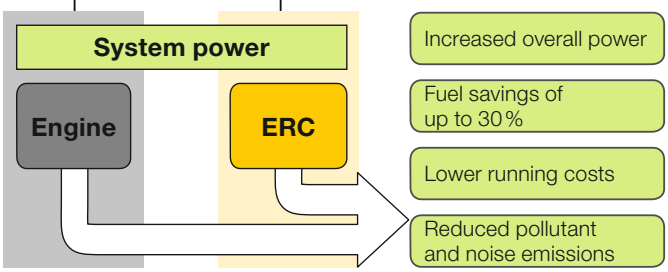

System Power

The energy recovery cylinder is a storage system which is independent of the diesel engine. The system performance of material handling machines fitted with the ERC system is composed of the installed engine power and the energy recovery cylinder. When the equipment is raised, energy from the ERC system is supplied in addition to the power from the diesel engine.

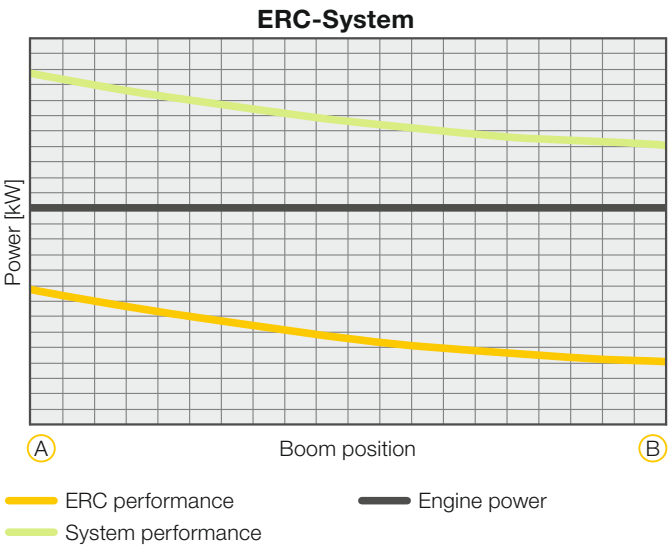

Equipment

Undercarriage	110 M	110 C	110 M HR	110 C HR	110 C Gantry
Track pads, variants		+		+	+
Individual control outriggers	+		•		
Three-piece chain guide		•		•	•
Shuttle axle lock, automatic	•		•		
Outrigger monitoring system	+		+		
Tires, variants	+		+		
Trailing cable [2]		•		•	•
Protection for piston rods, outriggers	+		+		
Two lockable storage compartments	•				
Cable reel system [2]		+		+	+

Uppercarriage	110 M	110 C	110 M HR	110 C HR	110 C Gantry
Uppercarriage right side light, 1 piece, halogen	•	•	•	•	•
Uppercarriage rear light, 2 pieces, LED	+	+			
Uppercarriage underneath rear light, 1 piece, LED			+	+	+
Refuelling system with filling pump [1]	+	+	+	+	+
Railing on uppercarriage	•	•	•	•	•
Generator	+	+	+	+	+
Main battery switch for electrical system	•	•	•	•	•
Amber beacon, at uppercarriage, LED double flash	+	+	+	+	+
Protection for headlights	+	+			
Tool equipment, extended	•	•	•	•	•

Hydraulic System	110 M	110 C	110 M HR	110 C HR	110 C Gantry
Electronic pump regulation	•	•	•	•	•
Liebherr hydraulic oil from – 4 °F to + 104 °F	•	•	•	•	•
Liebherr hydraulic oil, biologically degradable	+	+	+	+	+
Liebherr hydraulic oil, specially for warm or cold regions	+	+	+	+	+
Magnetic rod in hydraulic tank	•	•	•	•	•
Bypass filter	+	+	+	+	+
Preheating hydraulic oil	+	+	+	+	+

Engine	110 M	110 C	110 M HR	110 C HR	110 C Gantry
Fuel anti-theft device [1]	+	+	+	+	+
Air pre-filter with dust discharge	+	+	+	+	+
Automatic engine shut-down (time adjustable)	+	+	+	+	+
Preheating fuel [1]	+	+	+	+	+
Preheating coolant	+	+	+	+	+
Preheating engine oil * [1]	+	+	+	+	+

Cooling System	110 M	110 C	110 M HR	110 C HR	110 C Gantry
Reversible fan drive, fully automatic	+	+	+	+	+
Protective grid in front of cooler intake	•	•	•	•	•

Operator's Cab	110 M	110 C	110 M HR	110 C HR	110 C Gantry
Stabilizer, control lever, left console	+		+		
Stabilizer, proportional control on left joystick	•		•		
Cab lights rear, LED	+	+	+	+	+
Cab lights front, LED	+	+	+	+	+
Cab lights front, LED (under rain cover)	•	•	•	•	•
Armrest adjustable	•	•	•	•	•
Circular bubble level	•	•	•	•	•
Slewing gear brake Comfort, button on the left or right joystick	+	+	+	+	+
Driver profile, personalized (max. 5 drivers)	+	+	+	+	+
Operator's seat Comfort	•	•	•	•	•
Operator's seat Premium	+	+	+	+	+
Driving alarm (acoustic signal is emitted during travel, can be switched ON/OFF)	+	+	+	+	+
Fire extinguisher	+	+	+	+	+
Footrest	+	+	+	+	+
Horn, button on left joystick	•	•	•	•	•
Joystick steering	•		•		
Cab elevation, hydraulic (LHC)	•	•	•	•	•
Cab elevation, hydraulic with double parallelogram (LHC-D)	+	+	+	+	+
Cab elevation, rigid (LFC)	+	+	+	+	+
Automatic air conditioning	•	•	•	•	•
Wheel steering (slim version)	+		+		
LiDAT, vehicle fleet management	•	•	•	•	•
Engine shut-down (emergency stop) cab [2]		•		•	•
Proportional control	•	•	•	•	•
Radio Comfort, control via display with handsfree set	+	+	+	+	+
Preparation for radio installation	•	•	•	•	•
Back-up alarm (acoustic signal is emitted traveling backward, can not be switched off)	+		+		
Amber beacon, on cabin, LED double flash	+	+	+	+	+
Windows made from impact-resistant laminated safety glass	•	•	•	•	•
Windscreen wiper, roof	+	+	+	+	+
Windshield wiper, entire windscreen	•	•	•	•	•
Top guard	+	+	+	+	+
Front guard, adjustable	+	+	+	+	+
Sun visor	+	+	+	+	+
Stationary air-conditioning [2]		•		•	•
Left control console, folding	•	•	•	•	•

Equipment	110 M	110 C	110 M HR	110 C HR	110 C Gantry
Boom lights, 2 pieces, LED	•	•	•	•	•
Stick lights, 4 pieces, LED	•	•	•	•	•
Boom shutoff (retract/extend), electronically	+	+	+	+	+
Equipment with electro-hydraulic end position control	•	•	•	•	•
AutoLift	+	+	+	+	+
Pressure warning mechanism hoist cylinder	•	•	•	•	•
ERC system	•	•	•	•	•
Filter system for attachment	+	+	+	+	+
Boom cylinder cushioning	•	•	•	•	•
Stick camera (with separate monitor), bottom side, with protection	+	+	+	+	+
Load torque limitation	+	+	+	+	+
Liebherr multi coupling system	+	+	+	+	+
Pipe fracture safety valves hoist cylinders	•	•	•	•	•
Pipe fracture safety valves stick cylinders	•	•	•	•	•
Quick coupling system MH 110B	+	+	+	+	+
Protection for piston rod, energy recovering cylinder	+	+	+	+	+
Protection for piston rods, hoist cylinder	+	+	+	+	+
Stick shutoff (retract), electronically	•	•	•	•	•
Stick shutoff (retract/extend), electronically	+	+	+	+	+
Retract stick without pressure	•	•	•	•	•
Sticks with quick coupling	+	+	+	+	+
Overload warning device	+	+	+	+	+

Complete Machine	110 M	110 C	110 M HR	110 C HR	110 C Gantry
Lubrication					
Lubrication undercarriage, manually – centralized (one grease point)	•		•		
Central lubrication system for uppercarriage and equipment, zautomatically	•	•	•	•	•
Central lubrication system for undercarriage, automatically	+		+		
Central lubrication system, extension for attachment	+	+	+	+	+
Special coating					
Special coating, variants	+	+	+	+	+
Monitoring					
Rear view monitoring with camera	•	•	•	•	•
Side view monitoring with camera	•	•	•	•	•

• = Standard, + = Option
* = country-dependent, [1] not with electric drive, [2] only with electric drive

Options and/or special equipments, supplied by vendors other than Liebherr, are only to be installed with the knowledge and approval of Liebherr in order to retain warranty.

The Liebherr Group of Companies

Diverse Product Range
The Liebherr Group is one of the largest construction equipment manufacturers in the world. Liebherr's quality products and services hold a high reputation in many industries. The wide range includes domestic appliances, aerospace and transportation systems, machine tools and maritime cranes.

Exceptional Customer Benefit
Every product line provides a complete range of models in many different versions. With both their technical excellence and superior quality, Liebherr products offer customers the highest benefits in practical applications.

State-of-the-art Technology
Liebherr attributes great importance to the product areas of core technology and components, in order to achieve its consistent, top-quality products. Important modules and components are developed and manufactured in-house, for instance, the entire drive and control technology for the construction equipment and mining trucks.

Worldwide and Family-Owned
Hans Liebherr founded the Liebherr family company in 1949. Since that time, the enterprise has steadily grown to a group of more than 130 companies with more than 48,000 employees located on all continents. The corporate headquarters of the Group is Liebherr-International AG in Bulle, Switzerland. The Liebherr family is the sole owner of the company.

www.liebherr.us

⚠ WARNING

This product can expose you to chemicals including lead and lead compounds, which are known to the State of California to cause cancer and birth defects or other reproductive harm.
For more information go to www.P65warnings.ca.gov.

⚠ WARNING

Breathing diesel engine exhaust exposes you to chemicals known to the State of California to cause cancer and birth defects or other reproductive harm.
▶ Always start and operate the engine in a well-ventilated area.
▶ If in an enclosed area, vent the exhaust to the outside.
▶ Do not modify or tamper with exhaust system.
▶ Do not idle the engine except as necessary.
For more information go to www.P65warnings.ca.gov/diesel.

RG-BK LHB/VF-12248996-web-03.19_enUS

Liebherr USA, Co.
Construction Equipment Division
4800 Chestnut Avenue, Newport News, VA 23607
☎ +1 (757) 240 4250
www.liebherr.us, E-Mail: Construction.USA@liebherr.com
www.facebook.com/LiebherrConstruction